2024—2025 Edition

NETWORK APPLIANCES

iBASE

www.ibase.com.tw

Table of Contents

About IBASE 3-4
Your Best Partner 5
Modular Design with High Expandability 6
Advanced LAN Bypass 7
5G Opportunities 8-9
Networking & Communication Applications 10-11
IBASE Network Appliances Introduction 12
Comparison Table 13-19

Multi-access Edge Computing

NEW	INA8505	Enterprise-level 1U Edge Server with Intel® Xeon® D Processor & up to 4x 25GbE Ports	20

Rackmount Network Appliances

	INA7605	Performance 2U Network Appliance with Dual Intel® Xeon® Scalable Processors & up to 64 GbE Ports	21
	INA7602	Performance 2U Network Appliance with AMD EPYC 9004 & up to 64 Ports	22
	INA7600	Performance 2U Network Appliance with Dual Intel® Xeon® Ice Lake Scalable Processor & up to 64 GbE Ports	23-24
	INA3605	Enterprise 1U Network Appliance with Intel® Xeon® E-2300 Processors & up to 16 GbE Ports	25
	INA3604	Enterprise 1U Network Appliance with Intel® Xeon® E-2300 Processors & up to 16 GbE Ports	26
	FWA8800	Enterprise 1U Network Appliance with AMD EPYC™ Embedded 3000 Series & up to 16 GbE Ports	27-28
	FWA8708	Enterprise 1U Network Appliance with 9th or 8th Gen Intel® Xeon® / Core™ i7/i5/i3 Processor & up to 16 GbE Ports	29-30
	FWA8600	Enterprise 1U Network Appliance with Intel® Xeon® Processor D-2100 Series & up to 25 GbE Ports	31-32
	INA3608	Mainstream 1U Network Security Server with 13th Gen Intel® Core™ Processors (Raptor Lake-S) & up to 10 GbE Ports	33
	INA3606	Mainstream 1U Network Security Server with 12th Gen Intel® Core™ Processors (Alder Lake-S) & up to 10 GbE Ports	34
	INA3600	Mainstream 1U Network Appliance with 10th Gen Intel® Xeon® / Core™ i9/i7/i5/i3 Pentium® Gold / Celeron® Processor & up to 14 GbE Ports	35
	FWA8506	Mainstream 1U Network Appliance with Intel® Atom® Processor C3000 Series & 6x GbE & 4x 10 GbE Ports	36-37
NEW	INA2205	Entry 1U Network Appliance with Intel® Core® Processor (Alder Lake-N) & up to 8 GbE ports	38
	FWA6706R	Entry 1U Network Appliance with Intel® Celeron® i3 N-Series Processor N3350 & 6 GbE Ports	39

Desktop Network Appliances

	FWA6706D	Compact & Slim Fanless Network Appliance with Intel® Celeron® Processor N3350 & 6 GbE Ports	40
	AGS103T	Compact DIN-Rail Network Appliance with Intel® Atom® x6414RE/x6212RE Processors	41

uCPE/SD-WAN Appliances

NEW	INA1607	Desktop uCPE/SD-WAN Appliance with Intel® Amston Lake x7405C & up to 2x GbE Ports	42
	INA1600	Desktop uCPE/SD-WAN Appliance with AMD Ryzen™ Embedded V1605B/R1505G & up to 6x GbE Ports	43

Expansion Module Cards

	Network Interface Modules	Fast, Multi-Function & Flexible Networking Modules	44-45
	IBN Module List		46

About IBASE

February 2000	Founded
Taipei, Taiwan	HQ
C. S. Lin	Chairman

Design and Manufacturing of Robust Computing Platforms

Capital	US$66.7M
Stock Code	TPEx 8050 (Since 2003)
Employees	980 (Worldwide) 750 (IBASE HQ)

Company Profile

IBASE Technology specializes in the design and manufacture of robust industrial PC, products since its establishment in 2000. IBASE carries out manufacturing and quality control at its own facilities in Taiwan that are certified with ISO 9001, ISO 13485, ISO 14001 and ISO 27001 standards. Current offerings comprise x86 and RISC-based industrial motherboards, embedded systems, panel PCs, network appliances and digital signage players. The company is publicly listed in the Taipei Exchange (TPEx: 8050) and is now a leading global provider of innovative industrial and embedded computing solutions.

Core Competence

IBASE has three manufacturing sites in Taiwan, with two in New Taipei City and another one in Taoyuan City. We manufacture and implement strict quality control to supply excellent industrial computer products that are 100% made in Taiwan. In addition to off-the-shelf products, IBASE also specializes in OEM/ODM/JDM services, tailoring products to fully meet customers' expectations and the needs of various applications. With manufacturing and quality control capabilities recognized by major international companies, IBASE boasts of strong innovative R&D teams and flexible and timely products delivery.

Design & Manufacturing Services

Set up to become a global leading provider of embedded board and system solutions, IBASE manufacturers and supplies cutting-edge products based on the latest technologies to match market demands. Our R&D and product management teams have the expertise to design and develop products that are innovative and meet customers' requirements and design specifications. We attach great importance to research and development, investing heavily in manpower and resources to continuously provide high-quality innovative products. IBASE is also committed to compliance with environmental policies by working to prevent pollution with non-use of banned or restricted substances in our production process and products, helping our customers respond to their environmental challenges.

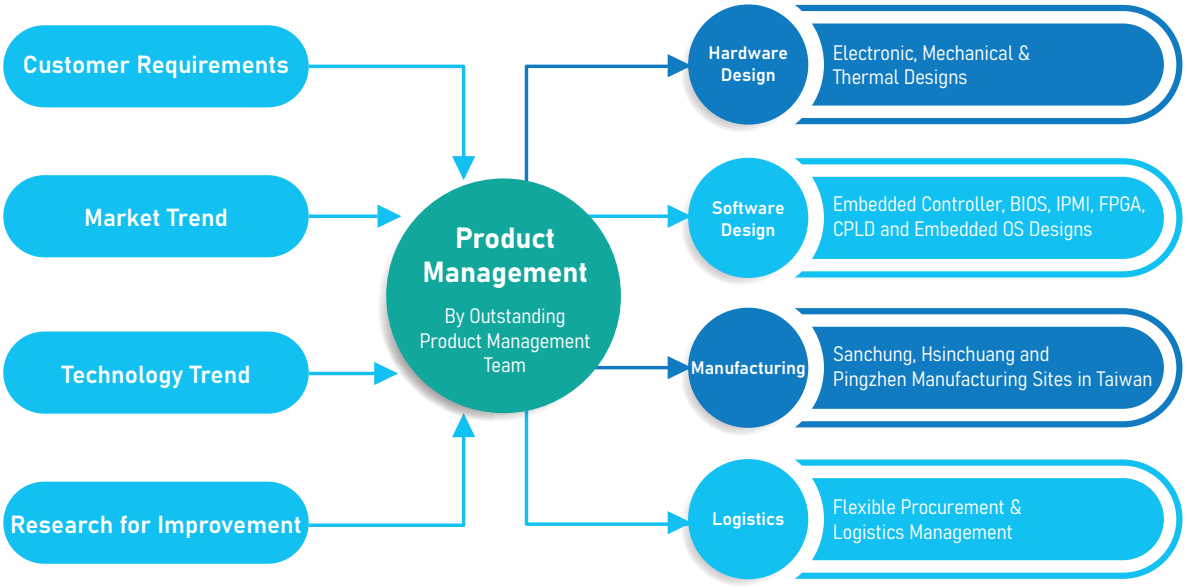

IBASE Manufacturing Sites

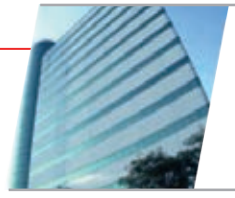

SANCHUNG

- Board Production
- Validation

3,124 m² / 945 Ping

HSINCHUANG

- System Assembly
- Validation

6,070 m² / 1,840 Ping

New

PINGZHEN

- Board Production
- System Assembly
- Validation

18,481 m² / 5,591 Ping

Total Size

297,891 Square-feet
(27,675 m² / 8,376 Ping)

Capacity

- **SMT Line x 7**
- **DIP Assembly Line x 4**
- **System Assembly Line x 10**
- **Cleanroom x 2**
- **Burn-in Room x 20**

PCBA
80K/month (In-house Production)
+ Outsourcing
System Assembly
50K/month (In-house Production)
+ Outsourcing

Certifications

ISO 9001 · ISO 14001 · ISO 13485 · ISO 27001

Your Best Partner

Since its establishment in 2000, IBASE has achieved remarkable growth and emerged as a leading provider of industrial computers and network appliances. Leveraging its extensive manufacturing experience, IBASE produces top-quality products for both OEM/ODM clients and the off-the-shelf market, utilizing the latest Intel® and AMD Processor technologies to deliver tailored and standard hardware solutions.

In anticipation of ever-evolving network requirements, IBASE has introduced a modular architecture approach, creating flexible and configurable network platforms that reduce the total cost of ownership and shorten time-to-market. This forward-thinking approach enables IBASE to stay ahead of the curve and meet the demands of tomorrow's networking landscape.

As a trusted partner, IBASE has earned a reputation for delivering well-designed products, cutting-edge solutions, and customized features to meet the specific needs of the market and its clients. IBASE remains committed to fostering strong and enduring relationships with customers and vendors, working collaboratively to create win-win partnerships.

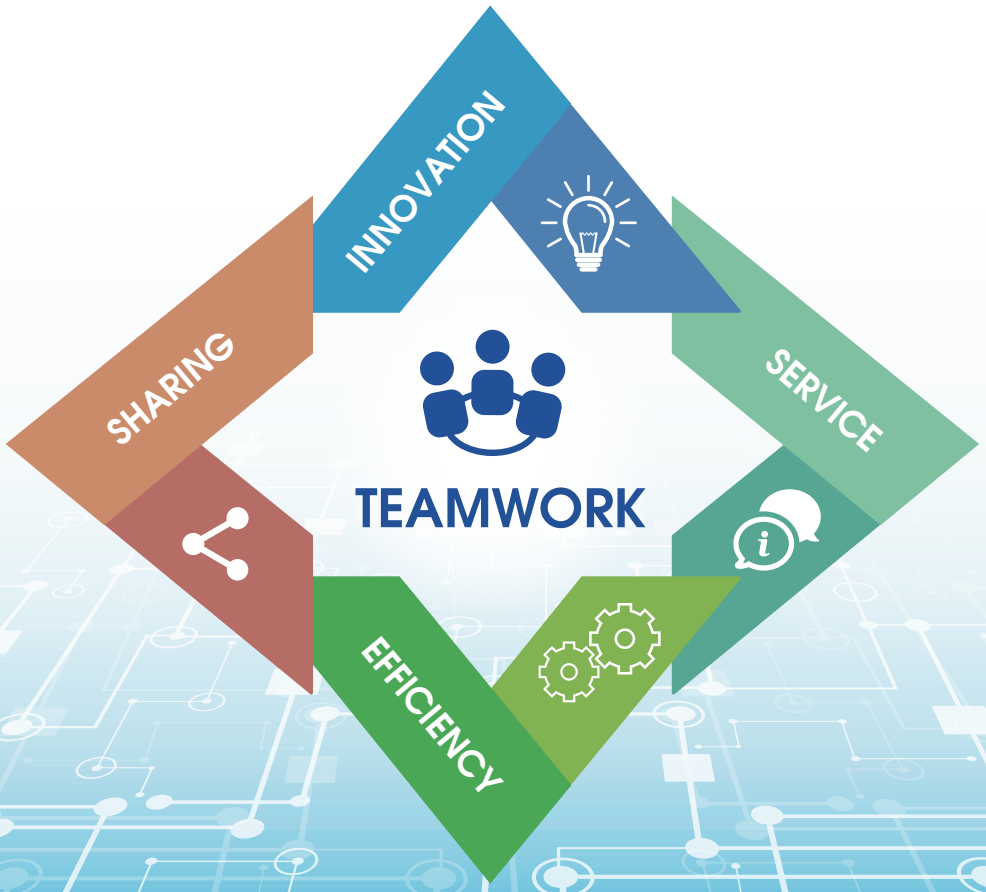

Modular Design with High Expandability

The modular design of IBASE's network appliances ensures high expandability and scalable functionality, as well as a reduction in the total cost of ownership. This standard approach allows rapid customization and easy configuration with modules that can be interchangeably combined to meet customers' optimal requirements.

IBASE network appliances offer flexible customization by enabling the same physical slots to supports different combinations of network interface controller (NIC) modules, HDD trays or empty slots. Advanced LAN bypass features fault-tolerance that prevents single point of failure in the appliance in mission critical networks to ensure essential business communications continue in the event of power outage.

NIC Modules

- Wide choice of network modules
- Optional 1GbE RJ45/SFP, 10GbE SFP+, 25GbE SFP28, 100GbE QSFP28
- Advanced LAN bypass pairs
- Flexible and hot-swappable slots for NIC modules

Data Processing

- Multi-core processing for optimal performance and throughput with support for DPDK, VMDq, SR-IOV
- Advanced security and anti-theft protection via TPM for full-disk encryption

System Features

- High density I/O ports
- Programmable user self-defined button
- Supports SATA, SAS, NVMe, M.2, mSATA or Mini PCI-E card for selected products
- Hot-swappable 2.5"/3.5" storage modules

Power Supply Unit (PSU)

- Redundant and hot-swappable power supply units
- AC or DC power supply options

Mounting Kits

- Rack mounting or wall mounting for desktop appliances
- Slide-rail mounting for 1U / 2U rackmount appliances
- DIN-rail mounting for desktop appliances

Advanced LAN Bypass

What is LAN Bypass?

Bypass is a hardware device that provides a fail-safe access port for an in-line monitoring appliance such as an IPS, firewall, WAN optimization device or UTM system. If the appliance loses power, experiences a software failure, or is removed, traffic can no longer flow through the link. The bypass switch removes the point of failure by automatically shunting traffic around the appliance whenever the appliance is incapable of passing traffic. The advantage of using bypass is it keeps network traffic flowing when the in-line appliance fails.

IBASE advanced LAN bypass provides two setting methods. The system developer can decide to use the BIOS or hardware jumper to control the bypass behavior in the system. BIOS control provides flexible usage for further upgrade or modification, and hardware jumper can fix the LAN operation at "Bypass" or "Normal" mode to prevent end users from changing the BIOS setting.

Normal Mode:
Ethernet Port 1 - 4 are in normal mode.

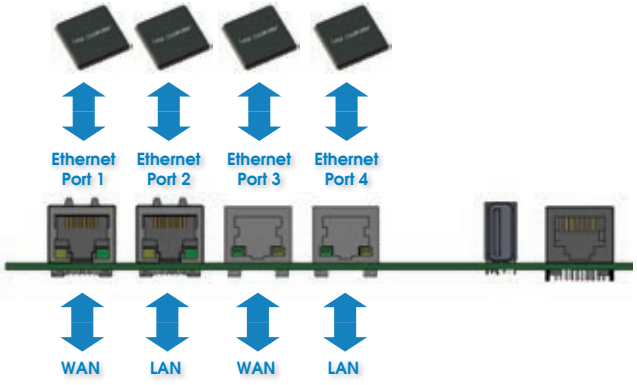

Bypass Mode:
Ethernet Port 3 & 4 are configured, being disconnected from the LAN controller in bypass mode. LAN ports are bridged together in pair.

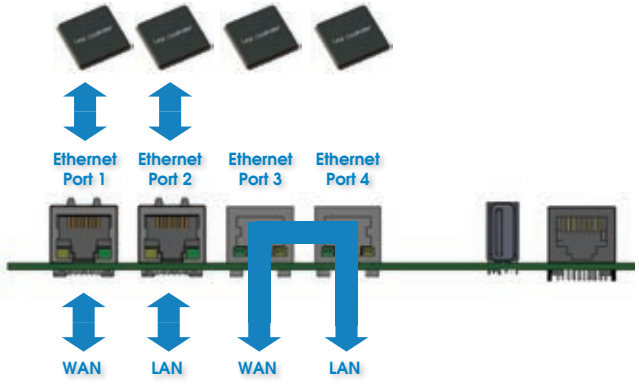

Features:

- LAN bypass or normal mode preset by BIOS
- Independent status control for each bypass segment
- Able to bypass GbE ports on a host system in response to three instances:
  1. System off
  2. System power on (the brief moment before accessing OS)
  3. System on (software request during runtime).
- System reboot during runtime if system hangs without packet loss.
- Software programmable bypass or normal mode.

5G Opportunities

With the rapid advancement of network function virtualization (NFV) technology, the transition from LTE to 5G has unlocked new opportunities for businesses, driven by increased speed and enhanced connectivity. Latency-sensitive applications such as Augmented Reality (AR), Virtual Reality (VR), video delivery, and factory automation have shifted towards the network edge, presenting unique hardware design challenges due to extreme temperature requirements, limited space, and limited power in rugged edge environments.

At IBASE, we have been at the forefront of providing network appliances for network security and application optimization for over a decade, with a diverse range of desktop and rackmount products. In addition to our traditional networking appliances, we have expanded our product lines to include uCPE/SD-WAN products,

uCPE SDWAN

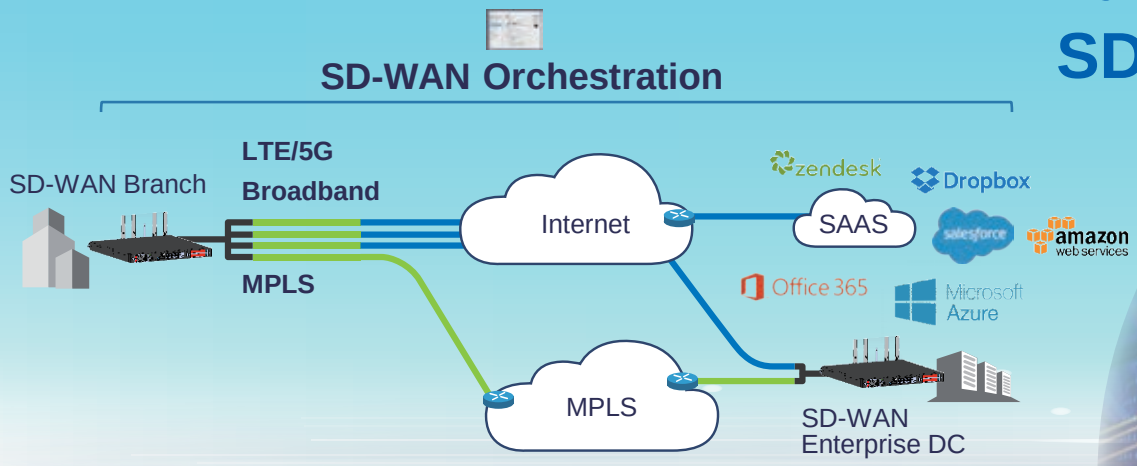

Application Delivery

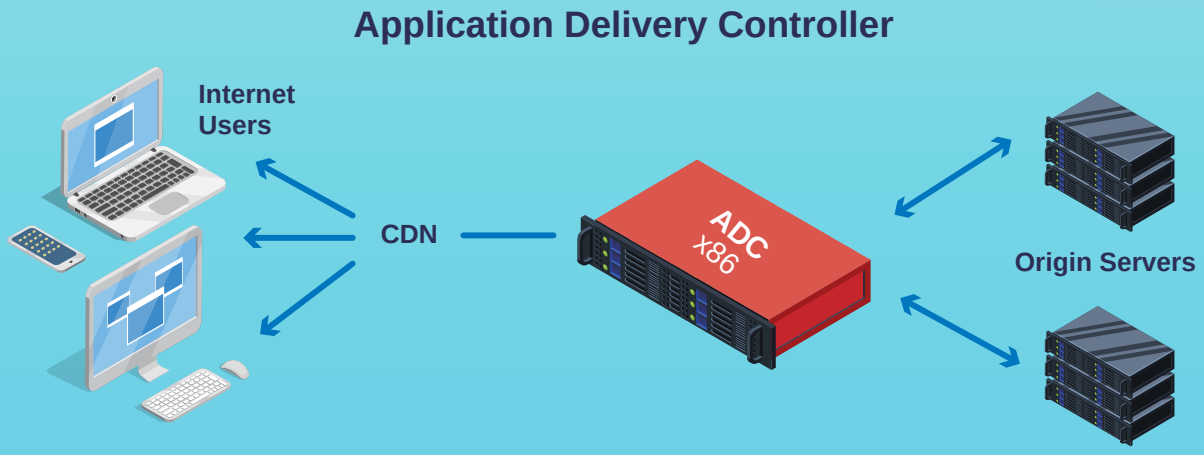

such as the INA1600, which supports WiFi 6 and LTE with up to Cat20/5G capabilities. Furthermore, leveraging our expertise in various IoT vertical markets, we also offer MEC (Multi-Access Edge Computing) servers that seamlessly integrate IoT network requirements with 5G edge infrastructure.

As a leader in the industry, IBASE is committed to delivering cutting-edge solutions that enable businesses to capitalize on the opportunities presented by 5G technology. With our innovative products and extensive experience in network appliances and IoT, we are well-equipped to cater to the evolving needs of the 5G era, empowering businesses to thrive in the rapidly changing landscape of modern networking.

MEC Edge Server

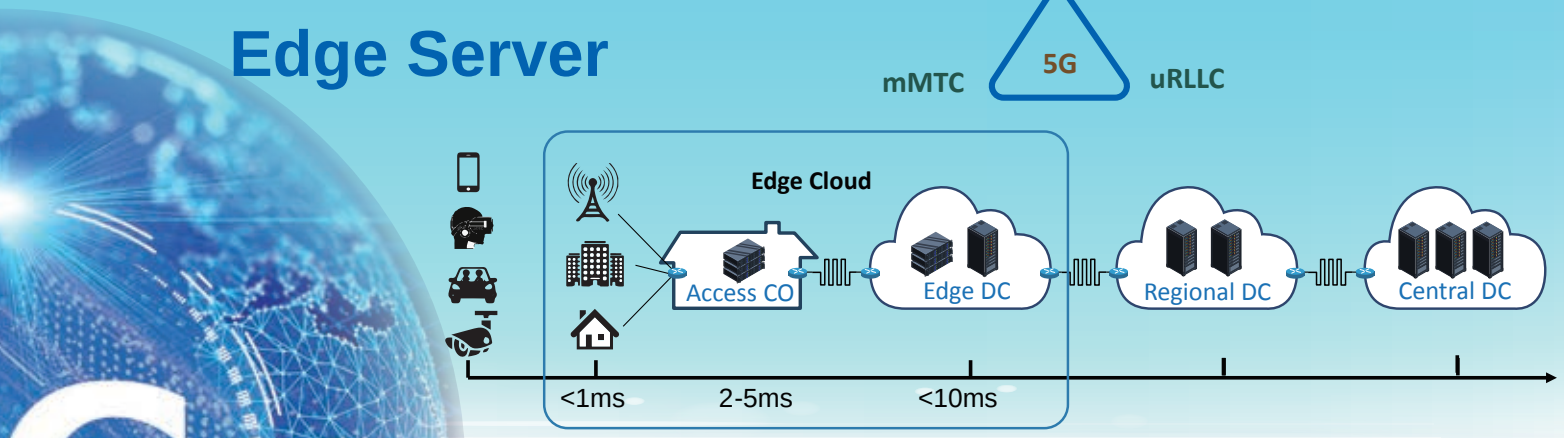

Network Security

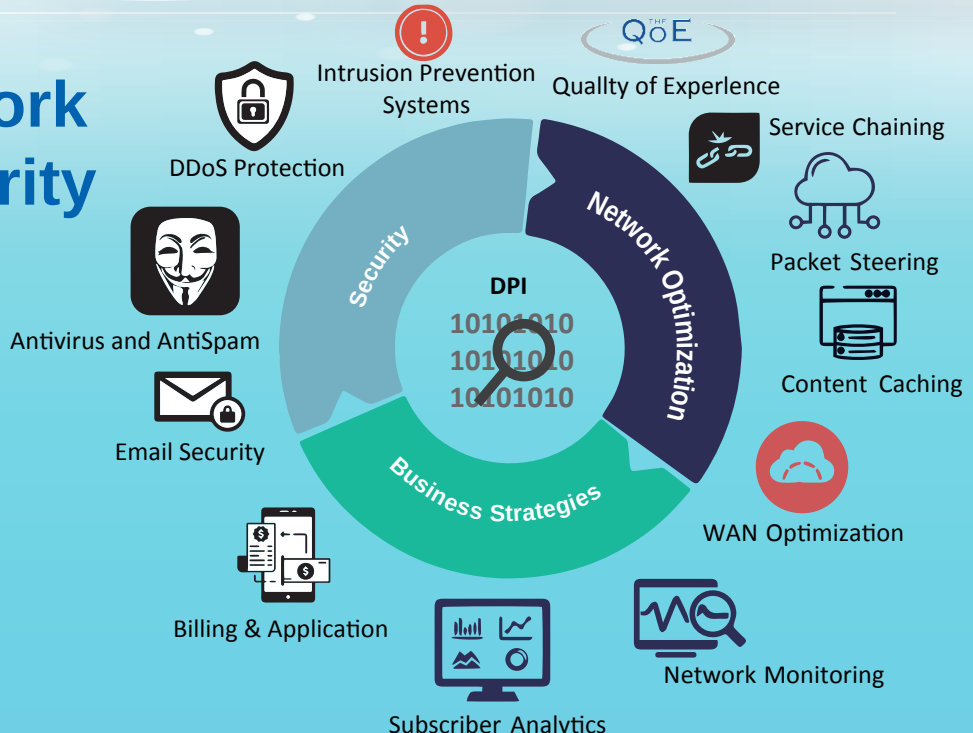

Networking & Communication Applications

Networking and communication have become indispensable elements in people's daily lives, making the world a smaller place by facilitating constant connectivity and faster progress. At IBASE, we recognize the significance of networking and offer a wide range of network hardware solutions, including enterprise-level 2U/1U rackmount network computing appliances, desktop network security appliances, uCPE/SD-WAN appliances, networking motherboards, and expansion module cards. Our high-speed network appliance solutions cater to diverse market segments and applications, including enterprise network security, IoT security, advanced threat protection, unified threat management (UTM), firewall, VPN, content filtering, SDN/NFV/SD-WAN, vCPE/uCPE, remote access server, and data management and analytics. Our solutions are equipped with four to 66 high-speed Gigabit Ethernet ports and expansion module cards, enabling multi-functionality and flexible networking configurations. With IBASE, customers can rely on our expertise and comprehensive product offerings to meet their networking needs across various industries and use cases. We are committed to providing cutting-edge solutions that simplify life and enable faster progress through reliable and efficient networking and communication technologies.

Network Management

- Central Portal Management
- Network Monitoring & Analytics

Cloud Computing

- Infrastructure as a service (IaaS)
- Software as a service (SaaS)

Cyber Security

- Intrusion Detection Systems
- Encryption/Decryption

SDN & NFV

- SD-WAN
- uCPE

MEC

- Multi-access Edge Computing

Network Security

- Firewall
- UTM

IBASE Network Appliances Introduction

IBASE offers an extensive range of network appliances, including desktop, 1U/2U rackmount systems, and uCPE/SD-WAN appliances that are designed to support a wide array of powerful Intel® and AMD processors. These systems also come with various options for Ethernet modules, inner storage expansion, and redundant power supplies to ensure high availability and serviceability.

Based on the x86 architecture, our high-performance networking platforms are specifically designed to meet the hardware requirements of a diverse range of network and cyber security applications. Our solutions cater to various markets, including independent software vendors (ISV), small and medium businesses (SMB), SOHO (small office/home office), and enterprise markets, among others.

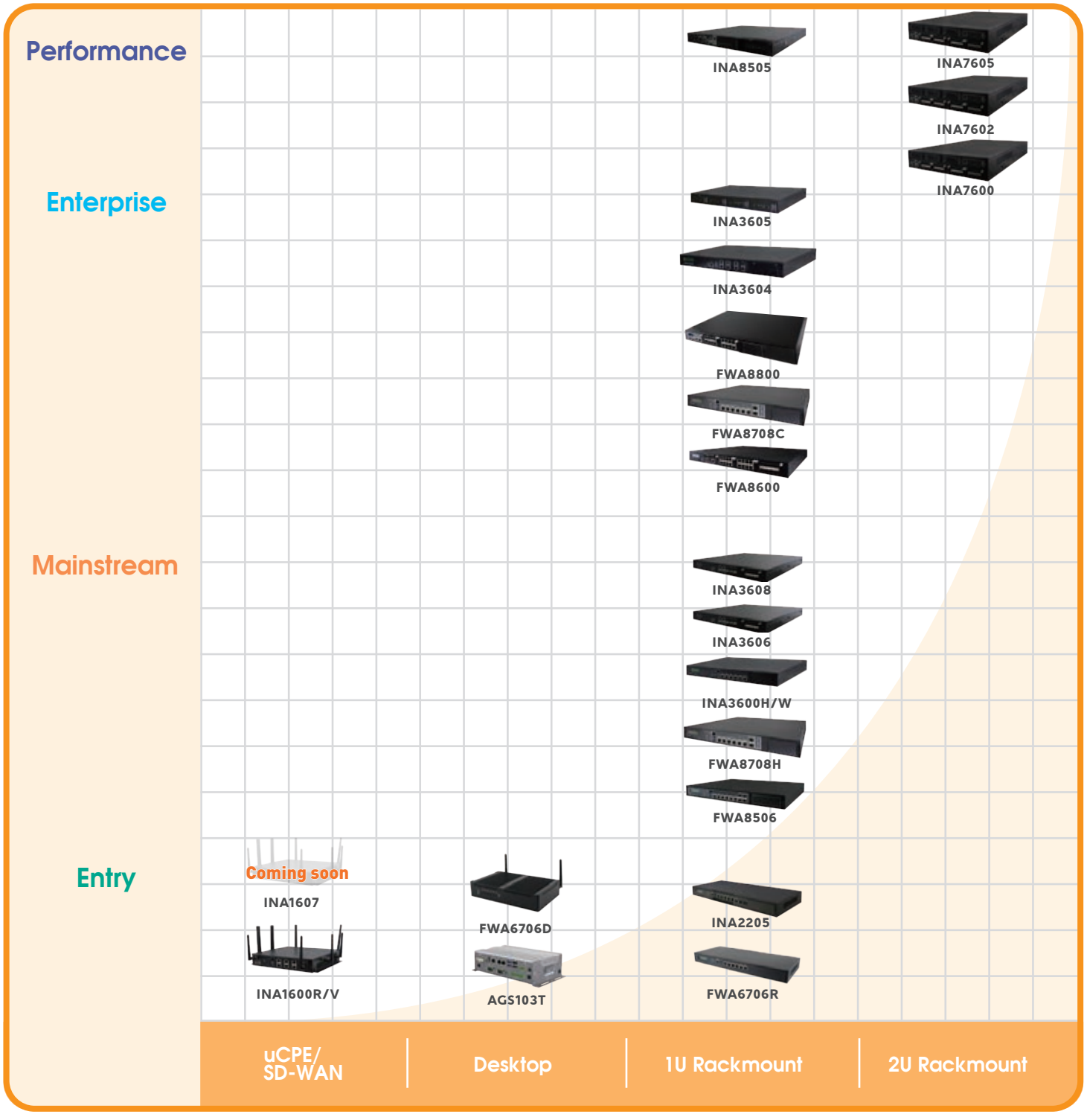

Remarks: 1. Specifications are subject to change without prior notice. 2. ODM/OEM is available. 3. For user's manual & datasheet download, visit www.ibase.com.tw.

Comparison Table

Coming soon

Model		INA8505	INA7605	INA7602
Form Factor		1U Edge Server	2U Rackmount	2U Rackmount
CPU		Intel Xeon D Processors	4th Gen Intel® Xeon® Scalable Processors (Emerald Rapids)	AMD EPYC 9004
Chipset		N/A	Intel® C741 PCH chipset	N/A
System Memory		4x DDR4 DIMM Up to 3200MHz, Max. 256GB RDIMM or 512GB LRDIMM,	16x DDR5 RDIMM Up to 4800MHz, Max. 256GB	12x DDR5 RDIMM Up to 4800MHz, Max. 384GB
Etherent	On-board	4x 25Gbe SFP28 ports (Intel® E823-C)	2x Intel® I210-AT GbE	2x Intel® I210-AT GbE
	Bypass	N/A	Depending on IBN module SKU	Depending on IBN module SKU
	NIC Module	N/A	8x IBN series, Max. 64GbE port	8x IBN series, Max. 64GbE port
Expansion		1x PCI-E x16 Expansion slot (Optional by SKU) 1x PCI-E x8 Expansion slot(Optional by SKU)	1x PCI-E x16 slot 1x M.2 (M-key) supports SATA 3.0 or PCI-E	1x PCI-E x16 slot 1x M.2 (M-key) supports SATA 3.0 or PCI-E
Storage		1x 16GB/32GB/64GB eMMC 2x M.2(M-Key); supports SATA & PCI-E 2x 2.5" SATA/ NVMe/ hot-Swappable HDD/SSD	8x 2.5" swappable SATA drive bay (by SKU)	2x 2.5"or 4x 3.5" swappable SATA drive bay (by SKU)
Display		1x VGA (optional IPMI module)	1x VGA (optional IPMI module) 1x LCM (by SHQ SKU)	1x VGA (optional IPMI module) 1x LCM (by SKU#)
TPM		TPM 2.0	TPM 2.0	TPM 2.0
I/O	Console	1x RJ45	1x RJ45	1x RJ45
	Reset	N/A	1x Factory default (GPIO)	1x Factory default (GPIO)
	USB	2x USB 3.0	2x USB 2.0	2x USB 2.0
	LED	Power/ HDD/ Status	Power / HDD / Status	Power / HDD / Status
Power Supply		Full-range 1+1 550W CRPS Redundant Power Supplies	Full-range 1600W 1+1 redundant power supply	Full-range 1200W 1+1 redundant power supply
Dimensions (mm)		438(W) x 420(D) x 43.8(H)	TBD	438 (W) x 660 (D) x 88 (H)
Weight		15 kg	TBD	21.0 kg (46.3 lbs)
Operating Temperature		0°C~ 50°C	0°C ~ 40°C (32°F ~ 104°F)	0°C ~ 40°C (32°F ~ 104°F)
Storage Temperature		-20° ~ 70°C	-20° ~ 70°C (-4°F ~ 158°F)	-20° ~ 70°C (-4°F ~ 158°F)
Relative Humidity		5 ~ 95%	5 ~ 90%	5 ~ 90%
Certification		CE/FCC	CE/FCC	CE/FCC
Page No.		p. 20	p. 21	p. 22

Remarks: 1. Specifications are subject to change without prior notice. 2. ODM/OEM is available. 3. For user's manual & datasheet download, visit www.ibase.com.tw.

Comparison Table

Model		INA7600	INA3605	INA3604
Form Factor		2U Rackmount	1U Rackmount	1U Rackmount
CPU		3rd Gen Intel® Xeon® Scalable Processors (Xeon® Ice Lake) LGA4189 Socket	LGA1200 Socket for Intel® Xeon® E-2300 Processors	LGA1200 Socket for Intel® Xeon® E-2300 Processors
Chipset		Intel® C621A PCH Chipset	Intel® C252 PCH chipset	Intel® C252 PCH chipset
System Memory		16x DDR4 RDIMMs Up to 3200MHz, Max. 512GB RDIMM	2x DDR4 UDIMMs Max. 64GB	2x DDR4 UDIMMs Max. 64GB
Etherent	On-board	2x Intel® I210-AT GbE	6x Gbe RJ45 Ports (Intel® i226V) with 2 pairs bypass 2x Gbe SFP port (Intel® i210IS)	6x Gbe RJ45 Ports (Intel® i226V) with 2 pairs bypass 2x Gbe SFP port (Intel® i210IS)
	Bypass	Depending on IBN module SKU	2-Segments, LAN3/4 & 5/6	2-Segments, LAN3/4 & 5/6
	NIC Module	8x IBN series, Max. 64GbE port	1x PCI-E x8 golden finger for NIC module	1x PCI-E x8 golden finger for NIC module
Expansion		1x PCI-E x16 slot (8-lane) 1x M.2 (M-key) Supports SATA 3.0 or PCI-E	1x PCI-E x8 golden finger for NIC module	1x PCI-E x8 golden finger for NIC module
Storage		2x 2.5"or 4x 3.5" swappable SATA drive bay (by SKU) 2x U.2 (PCI-E, SATA signal)	4x hot-swappable 3.5" SATA HDD/SSD storage - Optional supporting NVMe drives with LSI RAID controller (Suggested RAID Controller: LSI MegaRAID 9560-16i supporting RAID 0, 1, 5, 6, 10, 50 and 60) - Optional supporting HDD drives with LSI RAID controller (Suggested RAID Controller: LSI MegaRAID 9540-8i supporting RAID 0, 1, 10)	1x SATA DOM 1x internal 2.5" SATA SSD/HDD
Display		1x VGA (optional IPMI module) 1x LCM (by SKU#)	N/A	1x LCM
TPM		TPM 2.0	TPM 2.0	TPM 2.0
I/O	Console	1x RJ45	1x RJ45	1x RJ45
	Reset	1x Factory default (GPIO)	1x Factory default (GPIO)	1x Factory default (GPIO)
	USB	2x USB 2.0	2x USB 3.2	2x USB 3.2
	LED	Power / HDD / Status	Power / HDD / Status	Power / HDD / Status
Power Supply		Full-range 1200W 1+1 redundant power supply	Full-range 600 Watt redundant Power Supply	Full-range 500 Watt Single Power Supply
Dimensions (mm)		438 (W) x 660 (D) x 88 (H)	438 (W) x 630 (D) x 44 (H) mm	438 (W) x 384.2 (D) x 44 (H) mm
Weight		21.0 kg (46.3 lbs)	17.6 kg (30.8 lbs)	7.5 kg (16.53 lbs)
Operating Temperature		0°C ~ 40°C (32°F ~ 104°F)	0°C ~ 40°C (32°F ~ 104°F)	0°C ~ 40°C (32°F ~ 104°F)
Storage Temperature		-20° ~ 70°C (-4°F ~ 158°F)	-20° ~ 70°C (-4°F ~ 158°F)	-20° ~ 70°C (-4°F ~ 158°F)
Relative Humidity		5 ~ 90%	10~ 95%	10~ 95%
Certification		CE/FCC	CE/FCC	CE/FCC
Page No.		p. 23 - 24	p. 25	p. 26

Remarks: 1. Specifications are subject to change without prior notice. 2. ODM/OEM is available. 3. For user's manual & datasheet download, visit www.ibase.com.tw.

Comparison Table

Model		FWA8800	FWA8708	FWA8600
Form Factor		1U Rackmount	1U Rackmount	1U Rackmount
CPU		AMD EPYC™ Embedded 3000 series processor	9th or 8th Gen Intel® Xeon®/ Core™ i7/i5/i3 processors, LGA1151	Intel® Xeon® D-2100 Series
Chipset		N/A	Intel® C246 or H310 PCH Chipset	N/A
System Memory		4x DDR4 DIMMs Up to 2666MHz; Max. 64GB UDIMM (ECC/non-ECC) or 128GB RDIMM	FWA8708-C: 4x DDR4 DIMMs, up to 2666MHz, Max. 64GB UDIMM (ECC/non-ECC) FWA8708-H: 2x DDR4 DIMMs, up to 2666MHz, Max. 32GB UDIMM (Non-ECC)	4x DDR4 DIMMs up to 2666MHz, Max. 128GB RDIMM
Etherent	On-board	1x Intel® I210-AT GbE	FWA8708-C: 6x Intel® I210AT + 2x Intel® I210IS GbE FWA8708-H: 6x Intel® I211AT GbE	1x Intel® I210-AT GbE
	Bypass	Depending on IBN module SKU	2x segment	Depending on IBN module SKU
	NIC Module	2x IBN series, Max. 16GbE ports	1x IBN series (for FWA8708-C only)	3x IBN series & 1x IBN-P401Q, Max. 24 GbE ports
Expansion		1x PCI-E x8 slot	FWA8708-C: 1x or 2x PCI-E slot on rear panel 1x Mini PCI-E slot (PCI-E, SATA signal) FWA8708-H: 1x Mini PCI-E slot (SATA signal)	1x PCI-E x8 slot (4-lane)
Storage		2x 2.5" or 3.5" SATA drive bay (optional) 1x M.2 slot (M-Key 2280, PCI-E x4 & SATA signal)	2x 2.5" or 3.5" SATA drive bay (optional) 1x M.2 slot (M-key 2280, PCI-E x4 & SATA signal, FWA8708-C only)	1x or 2x 2.5" SATA drive bay 1x M.2 slot (M-Key 2280, PCI-E x4 & SATA signal)
Display		1x VGA (via optional IDN100 module) 1x LCM	1x VGA via pin-header 1x LCM	1x VGA (via optional IDN100 module) 1x LCM
TPM		TPM 2.0	TPM 2.0	TPM 2.0
I/O	Console	1x RJ45	1x RJ45	1x RJ45
	Reset	1x Factory default (GPIO)	1x Factory default (GPIO)	1x Factory default (GPIO)
	USB	2x USB 2.0	2x USB 3.0	2x USB 2.0
	LED	Power / HDD / Status	Power / HDD / Status	Power / HDD / Status
Power Supply		Full-range 250W ATX or 300W 1+1 redundant power supply	Full-range 250W ATX or 300W 1+1 redundant power supply	Full-range 250W ATX or 300W 1+1 redundant power supply
Dimensions (mm)		438 (W) x 500 (D) x 44 (H)	438 (W) x 422 (D) x 44 (H)	438 (W) x 451 (D) x 44 (H)
Weight		12.0 kg (26.4 lbs)	9.0 kg (19.84 lbs)	10.0 kg (22.05 lbs)
Operating Temperature		0°C ~ 40°C (32°F ~ 104°F)	0°C ~ 40°C (32°F ~ 104°F)	0°C ~ 40°C (32°F ~ 104°F)
Storage Temperature		-20° ~ 70°C (-4°F ~ 158°F)	-20° ~ 70°C (-4°F ~ 158°F)	-20° ~ 70°C (-4°F ~ 158°F)
Relative Humidity		5 ~ 90%	5 ~ 90%	5 ~ 90%
Certification		CE/FCC	CE/FCC	CE/FCC
Page No.		p. 27 - 28	p. 29 - 30	p. 31 - 32

Remarks: 1. Specifications are subject to change without prior notice. 2. ODM/OEM is available. 3. For user's manual & datasheet download, visit www.ibase.com.tw.

Comparison Table

Model		INA3608	INA3606	INA3600
Form Factor		1U Rackmount	1U Rackmount	1U Rackmount
CPU		13th Gen Intel® Core i Processors LGA1700 Socket	12th Gen Intel® Core i Processors LGA1700 Socket	Intel® Xeon® Comet Lake-W
Chipset		Intel® PCH R680E	Intel® PCH R680E	Intel® W480E PCH chipset
System Memory		2x DDR5 UDIMM Up to 4800 MT/s, Max. 128 GB UDIMM	2x DDR5 UDIMM Up to 4800 MT/s, Max. 128 GB UDIMM	2x DDR4 DIMMs up to 2400MHz, 1x DIMMs, Max. 64GB (Non-ECC)
Etherent	On-board	4x 2.5Gbe RJ45 ports (Intel® i226V) 4x 1Gbe SFP ports (Intel® i210IS) 2x 10Gbe SFP+ (Intel® X710)	4x 2.5Gbe RJ45 ports (Intel® i226V) 4x 1Gbe SFP ports (Intel® i210IS) 2x 10Gbe SFP+ (Intel® X710)	6x Intel® I210-AT GbE
	Bypass	1x segment	1x segment	2x segment
	NIC Module	1x PCI-E(x8) golden finger for NIC module	1x PCI-E(x8) golden finger for NIC module	1x PCI-E x8 golden finger for NIC module
Expansion		1x PCI-E Gen5(x8) (for SSL card) 1x PCI-E Gen5(x8) (for IBN Module)	1x PCI-E Gen5(x8) (for SSL card) 1x PCI-E Gen5(x8) (for IBN Module)	1x PCI-E x8 slot
Storage		1x 2.5" HDD 1x SATA DOM 1x 2280 M.2 slot	1x 2.5" HDD 1x SATA DOM 1x 2280 M.2 slot	3x SATA data connectors 3x SATA power connectors 3x 2.5" internal
Display		1x LCM	1x LCM	1x VGA pin-header (via DP to VGA Bridge; CH7517A-BF) 1x LCM
TPM		TPM 2.0	TPM 2.0	TPM 2.0
I/O	Console	1x RJ45	1x RJ45	1x RJ45
	Reset	1x Factory default (GPIO)	1x Factory default (GPIO)	1x Factory default (GPIO)
	USB	2x USB 3.0	2x USB 3.0	2x USB 3.1
	LED	Power / HDD / Status	Power / HDD / Status	Power / HDD / Status
Power Supply		600W 1+1 Redundant Power Supply 500W Single Power Supply	600W 1+1 Redundant Power Supply 500W Single Power Supply	Full-range 250 watt single AC power supply
Dimensions (mm)		438(W) x 420(D) x 44(H)	438(W) x 420(D) x 44(H)	438(W) x 330(D) x 44(H) ± 0.3mm
Weight		N/A	N/A	12.0 kg (26.4 lbs)
Operating Temperature		0°C~ 50°C	0°C~ 50°C	0°C ~ 40°C (32°F ~ 104°F)
Storage Temperature		-20° ~ 70°C	-20° ~ 70°C	-20° ~ 70°C (-4°F ~ 158°F)
Relative Humidity		10 ~ 90%	10 ~ 90%	5 ~ 90%
Certification		CE/FCC	CE/FCC	CE/FCC
Page No.		p. 33	p. 34	p. 35

Remarks: 1. Specifications are subject to change without prior notice. 2. ODM/OEM is available. 3. For user's manual & datasheet download, visit www.ibase.com.tw.

Comparison Table

Model		FWA8506	INA2205	FWA6706R
Form Factor		1U Rackmount	1U Rackmount	1U Rackmount
CPU		Intel® Atom® C3758 Processor up to 2.2GHz	Intel® Alder Lake-N processors	Intel® Atom® N3350 Dual-Core SoC 1.1GHz
Chipset		N/A	N/A	N/A
System Memory		2x DDR4 DIMMs up to 2400MHz, Max. 64GB RDIMM, Max. 32GB UDIMM (ECC/non-ECC)	1x DDR5 SO-DIMM (Non-ECC) Up to 4800MHz Max. 16GB	2x DDR3L SO-DIMMs up to 1866MHz, Max. 16GB (Non-ECC)
Etherent	On-board	6x Intel® I211-AT GbE 1x Inphi CS4223 for 4x10GbE SFP+	6x Intel® I226V 2.5GbE 2x Intel® I210IS Gbe SFP	6x Intel® I211-AT GbE
	Bypass	2x segment	1x segment	1x segment
	NIC Module	N/A	N/A	N/A
Expansion		1x PCI-E x8 slot (4-lane)	N/A	1x Mini PCI-E (PCI-E & USB signal)
Storage		2x 2.5" SATA drive bays 1x CF slot	1x 2.5" SATA SSD/HDD 1x 2242 M.2 SATA	1x 2.5" SATA drive bay 1x CF slot
Display		1x LCM	1x LCM	1x VGA via pin-header 1x LCM
TPM		TPM 1.2	TPM 2.0	TPM 1.2
I/O	Console	1x RJ45	1x RJ45	1x RJ45
	Reset	1x Factory default (GPIO)	1x Factory default (GPIO)	1x Factory default (GPIO)
	USB	2x USB 3.0	2x USB 3.0	2x USB 3.0
	LED	Power / HDD / Status	Power / HDD / Status	Power / HDD / Status
Power Supply		Full-range 250W ATX power supply	Full range 65W power supply (Open Frame)	Full-range 65W power supply (open frame)
Dimensions (mm)		438 (W) x 340 (D) x 44 (H)	438 (W) x 180 (D) x 43.5 (H)	438 (W) x 180 (D) x 44 (H)
Weight		6.50 kg (14.33 lbs)	6.0 kg (13.22 lbs)	3.0 kg (6.62 lbs)
Operating Temperature		0°C ~ 40°C (32°F ~ 104°F)	0°C ~ 40°C (32°F ~ 104°F)	0°C ~ 45°C (32°F ~ 113°F)
Storage Temperature		-20° ~ 70°C (-4°F ~ 158°F)	-20° ~ 70°C	-20° ~ 70°C (-4°F ~ 158°F)
Relative Humidity		5 ~ 90%	10 ~ 90%	5 ~ 90%
Certification		CE/FCC	CE/FCC	CE/FCC
Page No.		p. 36 - 37	p. 38	p. 39

Remarks: 1. Specifications are subject to change without prior notice. 2. ODM/OEM is available. 3. For user's manual & datasheet download, visit www.ibase.com.tw.

Comparison Table

Model		FWA6706D	AGS103T
Form Factor		Desktop	Desktop
CPU		Intel® Atom® N3350 Dual-Core SoC 1.1GHz	Intel® Atom® x6413E/ x6211E Processors
Chipset		N/A	N/A
System Memory		2x DDR3L SO-DIMMs up to 1866MHz, Max. 16GB (Non-ECC)	1x DDR4 SO-DIMM, Max. 16GB
Etherent	On-board	6x Intel® I211-AT GbE	3x Intel® I225IT 2.5G GbE LAN
	Bypass	1x segment	N/A
	NIC Module	N/A	N/A
Expansion		1x Mini PCI-E (PCI-E & USB signal)	1x Full-size Mini PCI-E socket (USB 2.0) 1x Full-size Mini PCI-E socket (USB 2.0 + SATA) 1x M.2 B-Key socket (USB 3.0 + PCI-E)
Storage		1x 2.5" SATA drive bay 1x CF slot	1x mSATA
Display		1x VGA via pin-header	1x HDMI 1x DVI-I
TPM		TPM 1.2	TPM 2.0
I/O	Console	1x RJ45	4x DB-9
	Reset	1x Factory default (GPIO)	N/A
	USB	2x USB 3.0	2x USB 3.1 2x USB 2.0
	LED	Power / HDD / Status	Power / GPIO / WLAN / WWAN
Power Supply		Full-range 40W adaptor / 12V	Full-range 60W adaptor / 12V
Dimensions (mm)		227 (W) x 142 (D) x 44 (H)	190 (W) x 110 (D) x 52 (H)
Weight		2.0 kg (4.41 lbs)	1.2kg (2.64 lbs)
Operating Temperature		0°C ~ 40°C (32°F ~ 104°F)	-20° ~ 70°C (-4°F ~ 158°F)
Storage Temperature		-20° ~ 70°C (-4°F ~ 158°F)	-40°C~85°C (-40°F~185°F)
Relative Humidity		5 ~ 90%	5 ~ 90%
Certification		CE/FCC	CE/FCC/LVD (pre-scan)
Page No.		p. 40	p. 41

Remarks: 1. Specifications are subject to change without prior notice. 2. ODM/OEM is available. 3. For user's manual & datasheet download, visit www.ibase.com.tw.

Comparison Table

Coming soon

Model		INA1607	INA1600
Form Factor		Desktop	Desktop
CPU		Intel® Amston Lake x7405C	AMD Ryzen™ Embedded V1605B/R1505G
Chipset		N/A	N/A
System Memory		1x DDR5 SO-DIMMs Up to 4800MHz, Max. 16GB (ECC/non-ECC)	2x DDR4 SO-DIMMs up to 3200MHz, Max. 32GB (ECC/non-ECC)
Etherent	On-board	4x Intel® I226-V 2.5 GbE 1x Intel® i350-AM4 (2x GbE RJ45 and 2x GbE SFP)	INA1600V: 4x Intel® I211-AT GbE 1x Intel® i350-AM2 (2x GbE RJ45 or SFP combo ports) INA1600R: 4x Intel® I211-AT GbE
	Bypass	1x segment	1x segment
	NIC Module	N/A	N/A
Expansion		1x Mini PCI-E slot 1x M.2 slot (B-key 3042 and 3052, PCI-E(x1) & USB 3.0 signal) for LTE/5G 2x Micro SIM for M.2 LTE/5G module 1x M.2 slot (B key 3042 and 3080) for SATA, PCI-E for Storage	1x Mini PCI-E slot 1x M.2 slot (B-key 3042, PCI-E(x1) & USB 3.0 signal) 2x Micro SIM for M.2 or Mini PCI-E 4G/LTE module 1x M.2 slot (B/M-key 3080, PCI-E(x2) & USB 3.0 & SATA)
Storage		1x 2.5" SATA drive bay 1x 16GB/32GB/64GB eMMc	1x 2.5" SATA drive bay 1x 16GB/32GB/64GB eMMc
Display		N/A	1x DisplayPort
TPM		TPM 2.0	TPM 2.0
I/O	Console	1x RJ45	1x RJ45
	Reset	1x Factory default (GPIO)	1x Factory default (GPIO)
	USB	2x USB 3.0	2x USB 3.0
	LED	Power / HDD / Status	Power / HDD / Status
Power Supply		Full-range 84W adaptor / 12V	Full-range 84W adaptor / 12V
Dimensions (mm)		TBD	250 (W) x 231 (D) x 44 (H)
Weight		TBD	5.3 kg (11.68 lbs)
Operating Temperature		0°C ~ 40°C (32°F ~ 104°F)	0°C ~ 40°C (32°F ~ 104°F)
Storage Temperature		-20°C ~ 70°C (-4°F ~ 158°F)	-20°C ~ 70°C (-4°F ~ 158°F)
Relative Humidity		5% ~ 90%	5 ~ 90%
Certification		CE/FCC	CE/FCC
Page No.		p. 42	p. 43

Remarks: 1. Specifications are subject to change without prior notice. 2. ODM/OEM is available. 3. For user's manual & datasheet download, visit www.ibase.com.tw.

INA8505

Multi-access Edge Computing

Enterprise 1U Edge Server with Intel® Xeon® D Processor & up to 4x 25 GbE Ports

Features

- Intel® Xeon® D-2700 Processor
- 4x DDR4 DIMMs, Max. 256GB RDIMM or Max. 512GB LRDIMM
- 4x 25GbE SFP28 ports on board
- 2x 2.5” SATA/NVMe hot-swappable HDD/SSD
- Optional for one card:
  1x PCI-E (x16) Gen4 single-slot for double FHFL interfaces, passive cooling, up to 120W
  For two cards:
  1x PCI-E (x16) Gen4 single-slot +1x PCI-E (x8) Gen4 FHFL interfaces, passive cooling, up to 75W each
- Optional IPMI 2.0 module
- GPS time synchronization
- Supports SyncE and PTP IEEE 1588

Specifications

CPU	Intel® Xeon® D-2700 Processor
Chipset	N/A
Memory	4x DDR4 DIMMs, Max. 256GB RDIMM or 512GB LRDIMM, up to 3200MHz
Display	1x VGA (via optional IDN101 IPMI module)
Ethernet	4x 25 Gbe SFP28 ports (Intel® E823-C)
Bypass	N/A
Expansion	1x PCI-E x16 Expansion slot (optional by SKU) 1x PCI-E x8 Expansion slot (optional by SKU)
IPMI	Optional module; compliant with IPMI 2.0
Storage	1x 16GB/32GB/64GB eMMC 2x M.2 (M-Key); supports SATA & PCI-E 2x 2.5” SATA/ NVMe/ hot-swappable HDD/SSD
TPM	TPM 2.0 (optional TPM 2.0 module)
I/O	3x LED (Power/ HDD/ Status) 1x RJ45 console port 1x RJ45 management port 2x USB 3.0 ports
Power Supply	Full-range 550W CRPS 1+1 redundant power supply
Dimensions	438(W) x 420(D) x 43.8(H) mm 17.24” (W) x16.54” (D) x 1.72” (H)
Weight	15 kg (33.06 lbs) (estimated)
Operating Temperature	0°C ~ 50°C (32°F ~ 104°F)
Storage Temperature	-20°C ~ 70°C (-4°F ~ 158°F)
Operating Humidity	5% ~ 90%
Certification	CE/FCC

Ordering Information

INA8505	INA8505 Enterprise 1U Edge Server, MBN8505 Intel® Xeon® D-2700 Processor, 4x DDR4 DIMMs, 4x 25 GbE SFP28 ports, 550W CRPS 1+1 Redundant PSU, CPU cooler, optional IPMI, 1x PCI-E x16 slot, 1x PCI-E x8 slot, 2x 2.5” SDD Tray, Barebone without RAM/HDD/SSD

Accessories

PK1-51	Console cable, 160cm
VGA21A	VGA cable, 40cm

Dimensions

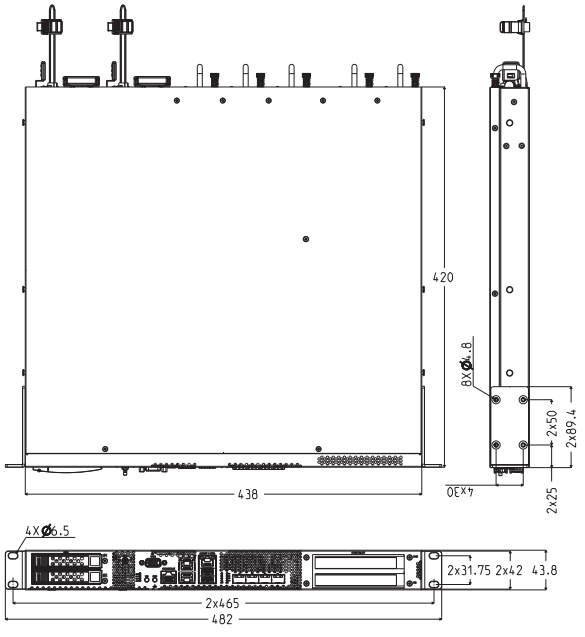

Remarks: 1. Specifications are subject to change without prior notice. 2. ODM/OEM is available. 3. For user’s manual & datasheet download, visit www.ibase.com.tw.

INA7605

Rackmount Network Appliance

Performance 2U Network Appliance with Dual Intel® Xeon® Scalable Processors & up to 64 GbE Ports

Features

- Dual 5th Gen Intel® Xeon® Scalable Processors
- 16x DDR4 RDIMM, Max. 256GB
- Max. 8x NIC modules; Max. 64 GbE ports (Optional)
- Max. 8x 2.5” HDD Swappable
- Optional IPMI 2.0 module
- 1x PCI-E (x16) expansion slot
- 2x 1600-watt redundant power supply

Specifications

CPU	Dual 5th Gen Intel® Xeon® Scalable Processors LGA4677 (Emeralds Rapids)
Chipset	Intel® C741 PCH chipset
Memory	16x DDR5 RDIMMs up to 4800 MT/s, Max. 256GB
Display	1x VGA (via optional IDN101 module)
Ethernet	Onboard: 2x Intel® I210-AT GbE NIC module slots: Max. 8x IBN cards, Max. 64 GbE
Bypass	Via IBN module SKU
Expansion	1x PCI-E x16 expansion slot 1x M.2 (PCI-E, SATA)
IPMI	Optional module, compliant with IPMI 2.0
Storage	HDD: 8x 2.5” Swappable (by SHQ SKU) 1x M.2 NVME 2280 1x SATA DOM
TPM	TPM 2.0
I/O	1x LCM 3x LED (Power / HDD / Status) 1x RJ45 console 2x USB 2.0 2x MGMT ports (LAN2 shared with IPMI NC-SI port)
Power Supply	Full-range 1600W 1+1 redundant power supply
Dimensions	N/A
Weight	N/A
Operating Temperature	0°C~ 40°C (32°F~104°F)
Storage Temperature	-20° ~ 70°C (-4°F~158°F)
Operating Humidity	5% ~ 90%
Certification	CE/FCC

Ordering Information

INA7605-SHQ	2U Rackmount Appliance, MBN7605 Intel Emerald Rapids Processor,16x DDR5 RDIMM, 1600W Redundant PSU, CPU cooler, 8x 2.5” external HDD, 4x IBN expansion slot, Barebone without RAM/HDD/Drive Bay Kit
INA7605-NIC	2U Rackmount Appliance, MBN7605 Intel Emerald Rapids Processor, 16x DDR5 RDIMM, 1600W Redundant PSU, CPU cooler, 2x 2.5” internal HDD, 8x IBN expansion slot, Barebone without RAM/HDD/Drive Bay Kit

Accessories

PK1-51	Console cable, 160cm
IDN101	IPMI 2.0 module
VGA21A	VGA cable, 40cm

Remarks: 1. Specifications are subject to change without prior notice. 2. ODM/OEM is available. 3. For user’s manual & datasheet download, visit www.ibase.com.tw.

INA7602

Rackmount Network Appliance

Performance 2U Network Appliance with AMD EPYC 9004 & up to 64 Ports

Features

- AMD EPYC™ 9004 Series
- 12x DDR5 RDIMM; Max. 384GB
- Up to 8x IBN Module or 4x 3.5” HDD with 4x IBN Module
- 2x 2.5” Internal HDD
- 1x PCI-E FH/FL
- Supports Broadcom RAID controller card 9560-16i

Specifications

CPU	AMD EYPC™ 9004 Series (96 Cores, 2.4GHz)
Chipset	N/A
Memory	12x DDR5 RDIMM 4800MHz, Max. 384GB
Display	SKU A: N/A SKU B: 1x LCM 1x VGA (via optional IDN101 module)
Ethernet	1x Intel® I210 1x Intel® I226 NIC module slots: Max. 8x IBN cards, Max. 64 GbE
Bypass	Via IBN module SKU
Expansion	1x PCI-E 16x slot (4 lane) SKU A: 4x NIC Module Slot SKU B: 8x NIC Module Slot
IPMI	Optional
Storage	1x M.2 Slot (2242 or 2280) 1x SATA DOM SKU 1 – 4x 3.5” HDD SKU 2 – 2x 2.5” HDD internal drive bay
TPM	TPM 2.0
I/O	3x LED (Power / HDD / Status) 1x RJ45 console 2x Management port 2x USB 3.0
Power Supply	Full-range 1200W 1+1 Redundant power supply
Dimensions	438 mm (W) x 660 mm (D) x 88.5 mm (H)
Weight	21 Kg
Operating Temperature	0°C ~ 40°C (32°F ~ 104°F)
Storage Temperature	-20°C ~ 70°C (-4°F ~ 158°F)
Operating Humidity	5 ~ 90%
Certification	CE/FCC

Ordering Information

INA7602-SHQ	2U Rackmount Appliance, MBN902 AMD EYPC™ 9004, 12x DDR5 RDIMM, 1200W Redundant PSU, CPU cooler 4x 3.5” external HDD, 4x IBN expansion slot, Barebone without RAM/HDD/Drive Bay Kit*
INA7602-NIC	2U Rackmount Appliance, MBN902 AMD EYPC™ 9004, 12x DDR5 RDIMM, 1200W Redundant PSU, CPU cooler, 2x 2.5” internal HDD, 8x IBN expansion slot, Barebone without RAM/HDD/Drive Bay Kit*

Accessories

PK1-51	Console cable, 160cm
IDN101	IPMI 2.0 module
VGA21A	VGA cable, 40cm

Dimensions

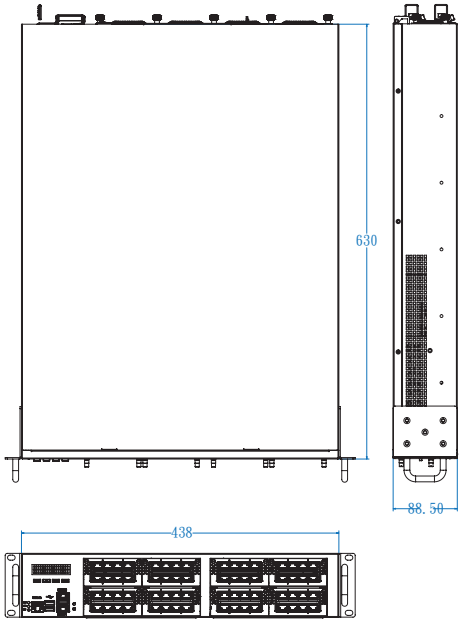

Remarks: 1. Specifications are subject to change without prior notice. 2. ODM/OEM is available. 3. For user’s manual & datasheet download, visit www.ibase.com.tw.

INA7600

Rackmount Network Appliance

Performance 2U Network Appliance with
Dual 3rd Gen Intel® Xeon® Scalable Processors & up to 64 GbE Ports

Features

- Dual 3rd Gen Intel® Xeon® Scalable Processors (Xeon® Ice Lake)
- 16x DDR4 RDIMM, Max. 512GB
- 8x or 4x NIC modules, Max. 64 GbE ports
- 1x PCI-E (x16) expansion slot
- 1200-watt redundant power supply

Specifications

CPU	3rd Gen Intel® Xeon® Scalable Processors (Xeon® Ice Lake) LGA4189 Socket
Chipset	Intel® C621A PCH Chipset
Memory	16x DDR4 RDIMMs Up to 3200MHz Max. 512GB (ECC)
Display	1x VGA
Ethernet	2x Intel® I210-AT GbE on IDN901 daughter board 8x or 4x NIC module, Max. 64 GbE ports
Bypass	Via IBN module SKU
Expansion	1x PCI-E x16 slot (8-lane) 1x M.2 (M-key) Supports SATA 3.0 or PCI-E
IPMI	N/A
Storage	2x 2.5" or 4x 3.5" Swappable SATA drive bay (by SKU) 2x U.2 (PCI-E x4, SATA signal)
TPM	TPM2.0
I/O	1x LCM (by SKU) 3x LED (Power/ HDD/ Status) 1x Factory default button (GPIO) 1x RJ45 console 2x USB 2.0 2x MGMT Ports (LAN2 shared with IPMI NC-SI port)
Power Supply	Full-range 1200W 1+1 redundant power supply
Dimensions	438 (W) x 660 (D) x 88 (H) mm 17.24" (W) x 25.98" (D) x 3.46" (H)
Weight	21.0 kg (46.3 lbs)
Operating Temperature	0°C ~ 40°C (32°F ~ 104°F)
Storage Temperature	-20° ~ 70°C (-4°F ~ 158°F)
Operating Humidity	5 ~ 90%
Certification	CE/FCC

Ordering Information

INA7600-NIC	INA7600-NIC 2U Rackmount Appliance, MBN901 Dual 3rd Gen Intel® Xeon® ICL-SP, C621A PCH,16x DDR4 DIMMs, Max. 66 GbE Ports, 1200W RPSU, CPU cooler, 1x PCI-E x16 slot, 2x U.2 slots.1x iIO2 LCM. Barebone without CPU/RAM/HDD/IBN Card* (Must order 8x IBN-cards)
INA7600-SHQ	INA7600-SHQ 2U Rackmount Appliance, MBN901 Dual 3rd Gen Intel® Xeon® ICL-SP, C621A PCH, 16x DDR4 DIMMs, Max. 34 GbE Ports, 1200W RPSU, CPU cooler, 1x PCI-E x16 slot, 2x U.2 slots. 4x 3.5" HDD Tray. Bare-bone without CPU/RAM/HDD/IBN Card* (Must order 4x IBN-cards)

* For a complete system, IBN modules & some components must be ordered.

Accessories

PK1-51	Console cable, 160cm
VGA21A	VGA cable, 40cm

Dimensions

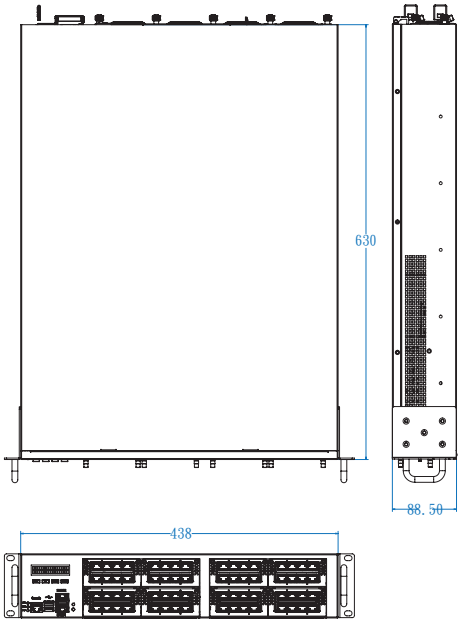

Optional Component BOM

Component BOM	Configuration Options	
Model Kit	Front IOs	Remarks
INA7600 KIT1	INA7600-NIC: 8 NIC slots with internal max. 2x 2.5" drive bay	For a complete system, component BOM, IBN module tray must be ordered.
INA7600 KIT2	INA7600-SHQ: 4 NIC slots with swappable 4x 3.5" driver bay	

Front I/O

INA7600-NIC

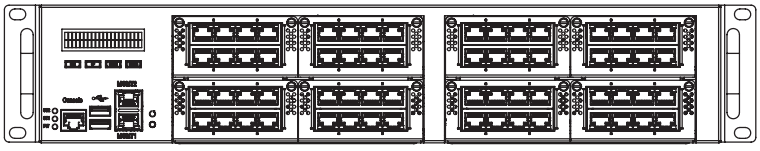

INA7600-SHQ

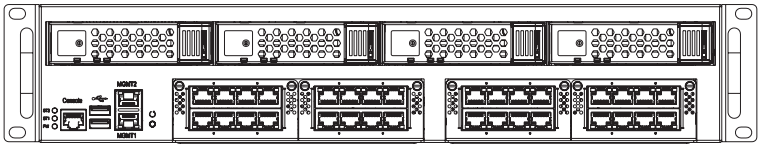

INA3605

Rackmount Network Appliance

Enterprise 1U Network Appliance with Intel® Xeon® E-2300 Processors & up to 16 GbE Ports

Features

- Intel® Xeon® E-2300 Processors with C252 PCH
- 2x DDR4 UDIMM / RDIMM, Max. 64GB (ECC)
- 6x RJ45 GbE with 2 pairs bypass on board
- 2x Gbe SFP ports on board
- Optional NIC slot
- 4x U.3 storage on the front
- SATA/NVMe SSD with RAID 0,1,5,6,10,50,60 support through LSI RAID controller
- 1x PCI-E (x8) expansion slot
- 600W AC redundant power supplies

Specifications

CPU	LGA1200 Socket for Intel® Xeon® E-2300 Processors
Chipset	Intel® C252 PCH chipset
Memory	2x DDR4 UDIMMs Max. 64GB
Display	N/A
Ethernet	6x Gbe RJ45 Ports(Intel i226V) with 2 pairs bypass 2x Gbe SFP port (Intel i210IS)
Bypass	2-Segments, LAN3/4 & 5/6
Expansion	1x PCI-E(x8) slot (8-lane) for INA3605
IPMI	N/A
Storage	4x hot-swappable 3.5" SATA HDD/SSD storage - Optional support for NVMe drives with LSI RAID controller (Suggested RAID Controller: LSI MegaRAID 9560-16i supporting RAID 0, 1, 5, 6, 10, 50 and 60) - Optional support for HDD drives with LSI RAID controller (Suggested RAID Controller: LSI MegaRAID 9540-8i supporting RAID 0, 1, 10)
TPM	TPM 2.0
I/O	3x LED (Power/ HDD/ Status) 1x Reset button 1x RJ45 console 2x USB3.2
Power Supply	Full-range 600 Watt redundant Power Supply
Dimensions	438 (W) x 630 (D) x 44 (H) mm 17.24" (W) x24.8" (D) x 1.73" (H)
Weight	17.6 kg (30.8 lbs)
Operating Temperature	0°C ~ 40°C (32°F ~ 104°F)
Storage Temperature	-20° ~ 70°C (-4°F ~ 158°F)
Operating Humidity	10~ 95%
Certification	CE/FCC

Ordering Information

INA3605	INA3605 1U Rackmount Appliance, MBN808 Intel® RKL-E, C252 PCH, 2x DDR4 DIMMs, Max. 16 LAN Ports, 600W 1+1 PSU, CPU cooler, 1x PCI-E(x8) slot, Barebone without CPU/RAM/HDD/IBN Card

Dimensions

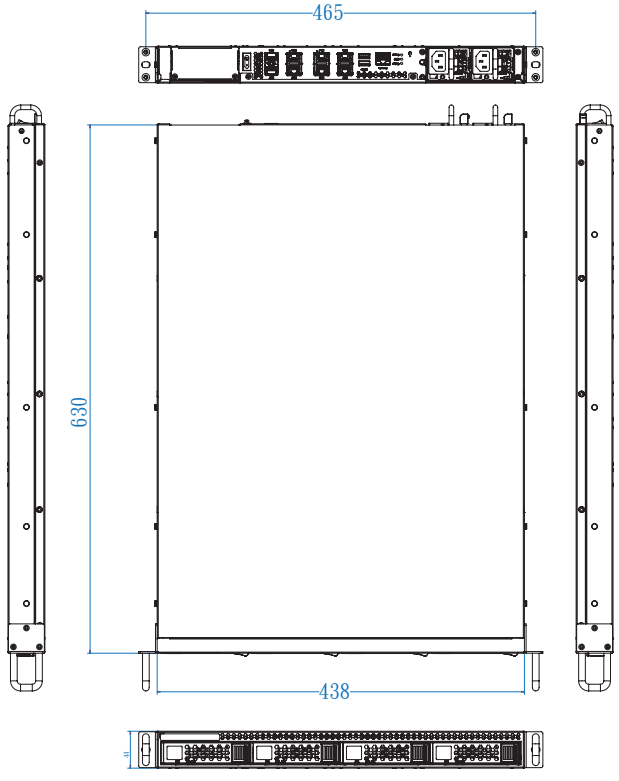

Remarks: 1. Specifications are subject to change without prior notice. 2. ODM/OEM is available. 3. For user's manual & datasheet download, visit www.ibase.com.tw.

INA3604

Rackmount Network Appliance

Enterprise 1U Network Appliance with Intel® Xeon® E-2300 Processors & up to 16 GbE Ports

Features

- Intel® Xeon® E-2300 Processors with C252 PCH
- 2x DDR4 UDIMM, RDIMM , Max. 64GB (ECC)
- 6x RJ45 GbE with 2 pairs bypass on board
- 2x Gbe SFP ports on board
- Optional NIC slot
- 1x PCI-E (x8) expansion slot
- 500W AC single power supply

Specifications

CPU	LGA1200 Socket for Intel® Xeon® E-2300 Processors
Chipset	Intel® C252 PCH chipset
Memory	2x DDR4 UDIMMs Max. 64GB
Display	1x LCM
Ethernet	6x Gbe RJ45 Ports (Intel i226V) with 2 pairs bypass 2x Gbe SFP port (Intel i210IS)
Bypass	2-Segments, LAN3/4 & 5/6
Expansion	1x PCI-E(x8) slot (8-lane) for INA3604
IPMI	N/A
Storage	1x SATA DOM 1x internal 2.5" SATA SSD/HDD
TPM	TPM 2.0
I/O	1x LCM 3x LED (Power/ HDD/ Status) 1x Reset button 1x RJ45 console 2x USB3.2
Power Supply	Full-range 500-watt single power supply
Dimensions	438 (W) x 384.2 (D) x 44 (H) mm 17.24" (W) x15.13" (D) x 1.73" (H)
Weight	7.5 kg (16.53 lbs)
Operating Temperature	0°C ~ 40°C (32°F ~ 104°F)
Storage Temperature	-20° ~ 70°C (-4°F ~ 158°F)
Operating Humidity	10~ 95%
Certification	CE/FCC

Ordering Information

INA3604	INA3604 1U Rackmount Appliance, MBN808 Intel® RKL-E, C252 PCH, 2x DDR4 DIMMs, Max. 16 LAN Ports, 500W PSU, CPU cooler, 1x PCI-E(x8) slot, 1x LCM, Barebone without CPU/RAM/HDD/IBN Card

Dimensions

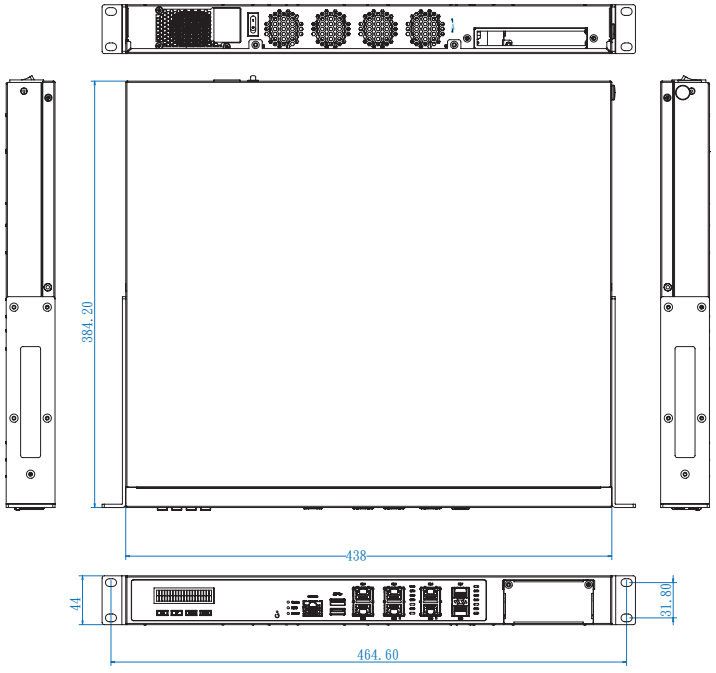

Remarks: 1. Specifications are subject to change without prior notice. 2. ODM/OEM is available. 3. For user's manual & datasheet download, visit www.ibase.com.tw.

FWA8800

Rackmount Network Appliance

Enterprise 1U Network Appliance with
AMD EPYC™ Embedded 3000 Series & up to 16 GbE Ports

Features

- AMD EPYC™ Embedded 3000 Series processor
- 4x DDR4 DIMMs; Max. 64GB UDIMM (ECC or non-ECC) or 128GB RDIMM
- 2x NIC module slots, Max. 16 GbE Ports
- Optional 2x swappable 2.5" drive bay
- 1x M.2 slot

Specifications

CPU	AMD EPYC™ Embedded 3000 series processor
Chipset	N/A
Memory	4x DDR4 DIMMs up to 2666MHz; Max. 64GB UDIMM (ECC or non-ECC) or 128GB RDIMM
Display	1x VGA 1x LCM 2x16 character with 4 keypads
Ethernet	On board: 1x Intel® I210-AT GbE NIC module slots: 2x IBN cards, Max. 16 GbE
Bypass	Depending on IBN modules SKU
Expansion	1x PCI-E x8 slot on rear panel
IPMI	N/A
Storage	2x 2.5" or 1x 3.5" SATA drive bay 1x M.2 slot (M-key 2280, PCI-E x4 & SATA signal)
TPM	TPM 2.0
I/O	1x LCM 3x LED (Power/ HDD/ Status) 1x Factory default button (GPIO) 1x RJ45 console 2x USB 2.0 1x MGMT (Sharedd with IPMI NC-SI port)
Power Supply	Full-range 250W ATX power supply or 300W 1+1 Redundant power supply
Dimensions	438 mm (W) x 500 mm (D) x 44 mm (H) 17.24"(W) x 19.68"(D) x 1.73"(H)
Weight	12kg (26.4 lbs)
Operating Temperature	0°C ~ 40°C (32°F ~ 104°F)
Storage Temperature	-20°C ~ 70°C (-4°F ~ 158°F)
Operating Humidity	5% ~ 90%
Certification	CE/FCC

Ordering Information

FWA8800-E8	1U Rackmount Appliance, MBN806 AMD EPYC™ Embedded 3201 8C/8T SoC, 4x DDR4 DIMMs, Max. 16 GbE Ports, 250W PSU, CPU cooler, 1x PCI-E x8 slot, Barebone without RAM/HDD/Drive Bay Kit/IBN Card*
FWA8800-E8R	1U Rackmount Appliance, MBN806 AMD EPYC™ Embedded 3201 8C/8T SoC, 4x DDR4 DIMMs, Max. 16 GbE Ports, 300W RPSU, CPU cooler, 1x PCI-E x8 slot, Barebone without RAM/HDD/Drive Bay Kit/IBN Card*

* For a complete system, IBN modules & some components must be ordered.

Accessories

PK1-51	Console cable, 160cm
VGA21A	VGA cable, 40cm

Dimensions

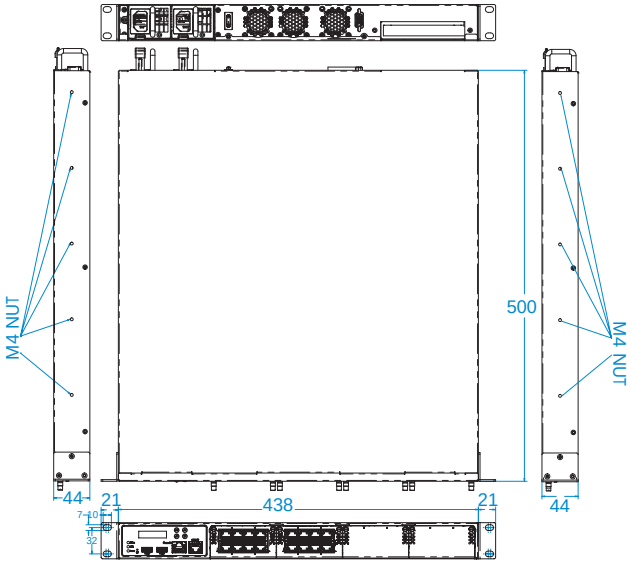

Remarks: 1. Specifications are subject to change without prior notice. 2. ODM/OEM is available. 3. For user's manual & datasheet download, visit www.ibase.com.tw.

Optional Component BOM

Component BOM		
Option-A	**Option-B**	**Model Kit**
FWA8800-NIC: 2x NIC slots	None	FWA8800 KIT1
	Expansion slot (Option B-2 only)	FWA8800 KIT2
	2x 2.5" drive bays +Expanson slot (Option B-1 + B-2)	FWA8800 KIT3
	1x 3.5"" drive bay+Expansion slot (Option B-1+B-2)(for Single PSU only)	FWA8800 KIT4
FWA8800-SHD: 2x NIC slots + 2x swappable 2.5" drive bay	None	FWA8800 KIT5
	Expansion slot (Option B-2 only)	FWA8800 KIT6

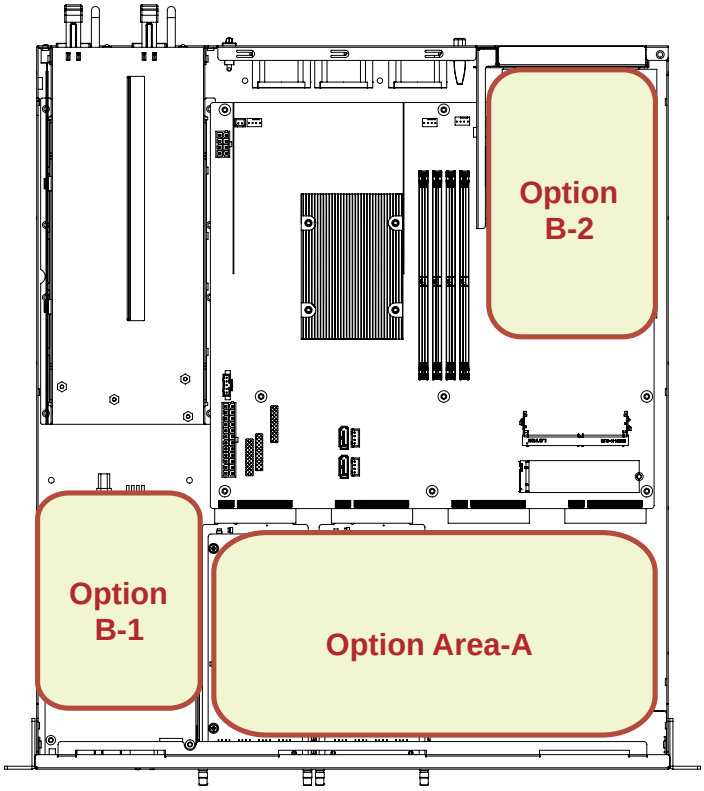

Front I/O

FWA8800-NIC

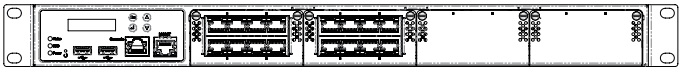

FWA8800-SHD

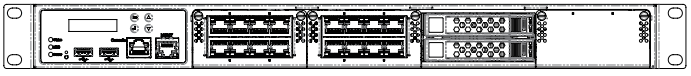

Remarks: 1. Specifications are subject to change without prior notice. 2. ODM/OEM is available. 3. For user's manual & datasheet download, visit www.ibase.com.tw.

FWA8708

Rackmount Network Appliance

Enterprise 1U Network Appliance with
9th or 8th Gen Intel® Xeon® / Core™ i7/i5/i3 Processor & up to 16 GbE Ports

Features

- 9th or 8th Gen Intel® Xeon® / Core™ i7/i5/i3 Processor with C246 or H310 PCH
- 6x RJ45 GbE + 2x SFP GbE on board
- 4x or 2x DDR4 DIMMs; Max. 64GB (ECC/non-ECC)
- Optional NIC slot (for FWA8708-C only)
- 1x Mini PCI-E slot
- 1x M.2 slot (for FWA8708-C only)

Specifications

CPU	FWA8708-C/CR: LGA1151 socket for 9th or 8th Gen Intel® Xeon® / Core™ i7/i5/i3 processors FWA8708-H/HR: LGA1151 socket for 9th or 8th Gen Intel® Core® i7/i5/i3 processors
Chipset	FWA8708-C/CR: Intel® C246 PCH chipset FWA8708-H/HR: Intel® H310 PCH chipset
Memory	FWA8708-C/CR: 4x DDR4 DIMMs, up to 2666MHz, Max. 64GB UDIMM (ECC or non-ECC) FWA8708-H/HR: 2x DDR4 DIMMs, up to 2666MHz, Max. 32GB UDIMM (Non-ECC)
Display	1x VGA via pin-header 1x LCM
Ethernet	FWA8708-C/CR: On board: 6x Intel® I210AT + 2x Intel® I210IS GbE NIC module slot: 1x IBN card, Max. 8x GbE FWA8708-H/HR: On Board: 6x Intel® I211AT GbE
Bypass	2x segment, LAN3/4 & 5/6
Expansion	FWA8708-C/CR: 1 or 2x PCI-E slot on rear panel 1x Mini PCI-E slot (PCI-E, SATA signal) FWA8708-H/HR: 1x Mini PCI-E slot (SATA signal)
IPMI	N/A
Storage	2x 2.5" or 3.5" SATA drive bay 1x M.2 slot (M-key 2280, PCI-E x4 & SATA signal)
TPM	TPM 2.0
I/O	3x LED (Power / HDD / Status) 1x Factory default button (GPIO) 1x RJ45 console 2x USB 3.0 1x MGMT (LAN1 shared with IPMI NC-SI port)
Power Supply	Full-range 250W ATX power supply or 300W 1+1 Redundant power supply
Dimensions	438 mm (W) x 422 mm (D) x 44 mm (H) 17.24"(W) x 16.61"(D) x 1.73"(H)
Weight	9.0 kg (19.84 lbs)
Operating Temperature	0°C ~ 40°C (32°F ~ 104°F)
Storage Temperature	-20°C ~ 70°C (-4°F ~ 158°F)
Operating Humidity	5% ~ 90%
Certification	CE/FCC

Ordering Information

FWA8708-C	1U Rackmount Appliance, MBN805C 9th or 8th Gen Intel® Xeon® / Core™ i7/i5/i3 Processors, C246 PCH, 4x DDR4 DIMMs, Max. 16 GbE Ports, 250W PSU, CPU Cooler, Barebone without RAM/HDD/ Drive Bay Kit/IBN Card*
FWA8708-CR	1U Rackmount Appliance, MBN805C 9th or 8th Gen Intel® Xeon® / Core™ i7/i5/i3 Processors, C246 PCH, 4x DDR4 DIMMs, Max. 16 GbE Ports, 300W RPSU, CPU Cooler, Barebone without RAM/HDD/ Drive Bay Kit/IBN Card*
FWA8708-H	1U Rackmount Appliance, MBN805H 9th or 8th Gen Intel® Core™ i7/i5/i3 Processors, H310 PCH, 2x DDR4 DIMMs, Max. 6 GbE Ports, 250W PSU, CPU cooler, Barebone without RAM/HDD/Drive Bay Kit*
FWA8708-HR	1U Rackmount Appliance, MBN805H 9th or 8th Gen Intel® Core™ i7/i5/i3 Processors, H310 PCH, 2x DDR4 DIMMs, Max. 6 GbE Ports, 300W RPSU, CPU cooler, Barebone without RAM/HDD/Drive Bay Kit*

*Must Order Component BOM

Accessories

PK1-51	Console cable, 160cm
VGA21A	VGA cable, 40cm

Dimensions

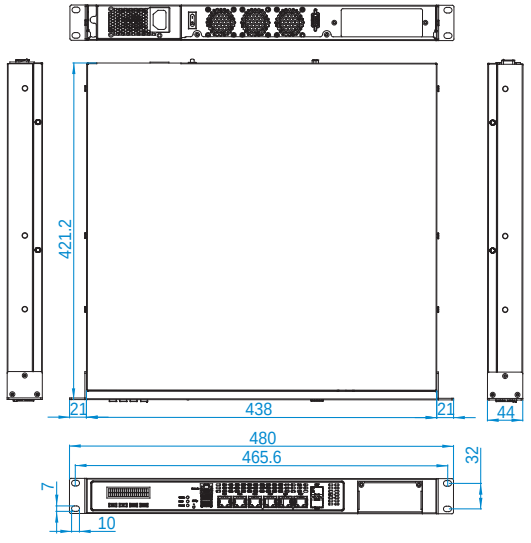

Optional Component BOM

FWA8708 Series Configuration Options		Component BOM
Option Area-A	Option Area-B	Model Kit
None	None	FWA8408/6 KIT1
	1x 3.5" HDD	FWA8408/6 KIT2
	2x 2.5" HDD	FWA8408/6 KIT3
	1x IBN Module **(for FWA8708-C model only)**	FWA8408 KIT4 **(must order IBN module tray)**
1 x 3.5" HDD	None	FWA8408/6 KIT5
	1x 3.5" HDD	FWA8408/6 KIT6
	1x IBN Module **(for FWA8708-C model only)**	FWA8408 KIT7 **(must order IBN module tray)**
2 x 2.5" HDD	None	FWA8408/6 KIT8
	1x IBN Module **(for FWA8708-C model only)**	FWA8408 KIT9 **(must order IBN module tray)**
1 x Expansion Slot	1x 3.5" HDD	FWA8408/6 KIT10
	2x 2.5" HDD	FWA8408/6 KIT11
	1x IBN Module **(for FWA8708-C model only)**	FWA8408 KIT12 **(must order IBN module tray)**
1 x Expansion Slot+ 2.5" HDD	1x 3.5" HDD	FWA8408/6 KIT13
	1x IBN Module **(for FWA8708-C model only)**	FWA8408 KIT14 **(must order IBN module tray)**
2 x Expansion Slot (for FWA8708-C model only)	None	FWA8408 KIT15
	1x 3.5" HDD	FWA8408 KIT16
	2x 2.5" HDD	FWA8408 KIT17

Compatible Processors

Compatible CPU	Memory	
	ECC	Non-ECC
E-2176G (for FWA8708-C only)	V	V
i7-8700	N/A	V
i7-8700T	N/A	V
i5-8500	N/A	V
i5-8500T	N/A	V
i3-8100	V	V
i3-8100T	V	V
G5400	V	V
G5400T	V	V
G4900	V	V
G4900T	V	V

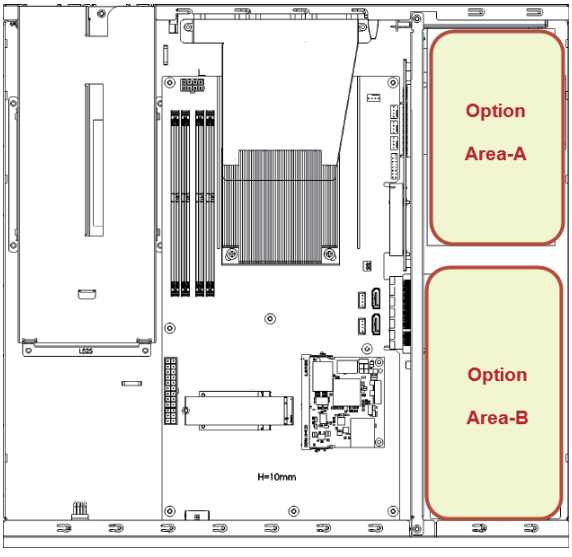

Remarks: 1. Specifications are subject to change without prior notice. 2. ODM/OEM is available. 3. For user's manual & datasheet download, visit www.ibase.com.tw.

FWA8600

Rackmount Network Appliance

Enterprise 1U Network Appliance with
Intel® Xeon® Processor D-2100 Series & up to 25 GbE Ports

Features

- Verification of Intel® Select Solutions for uCPE with Ubuntu
- Intel® Xeon® Processor D-2100 Series
- 4x DDR4 RDIMMs; Max. 128 GB
- 1x Intel® I210-AT GbE
- 4x NIC modules; Max. 24 GbE ports
- Optional IPMI module
- 1x M.2 slot & optional PCI-E x8 expansion slot (4-lane)

Specifications

CPU	Intel® Xeon® Processor D-2100 (BGA2518)
Chipset	N/A
Memory	4x DDR4 DIMMs up to 2666MHz, Max. 128GB RDIMM
Display	1x VGA (via optional IDN100 module)
Ethernet	On-board: 1x Intel® I210-AT GbE NIC module slots: 3x IBN cards (3rd slot max. 4-port) & 1x IBN-P401Q, Max. 24 GbE
Bypass	Depending on IBN modules SKU
Expansion	1x PCI-E x8 slot (4-lane) on rear panel
IPMI	Optional module, compatible with IPMI 2.0
Storage	1x or 2x 2.5" SATA Drive bay 1x M.2 slot (M-key 2280, PCI-E x4 & SATA signal)
TPM	TPM 2.0
I/O	3x LED (Power / HDD / Status) 1x Factory default button (GPIO) 1x RJ45 console 2x USB 2.0 1x MGMT (Shared with IPMI NC-SI port)
Power Supply	Full-range 250W ATX power supply or 300W 1+1 Redundant power supply
Dimensions	438 mm (W) x 451 mm (D) x 44 mm (H) 17.24"(W) x 17.76"(D) x 1.73"(H)
Weight	10.0 kg (22.05 lbs)
Operating Temperature	0°C ~ 40°C (32°F ~ 104°F)
Storage Temperature	-20°C ~ 70°C (-4°F ~ 158°F)
Operating Humidity	5% ~ 90%
Certification	CE/FCC

Ordering Information

FWA8600	1U Rackmount Appliance, MBN803 Intel® Xeon® Processor D-2100, 4x DDR4 DIMMs,Total Max. 25 GbE Ports, 250W PSU, CPU cooler, optional IPMI, 1x PCI-E x4 slot, Barebone without RAM/HDD/Drive Bay Kit/IBN Card*
FWA8600-RPSU	1U Rackmount Appliance, MBN803 Intel® Xeon® Processor D-21XX, 4x DDR4 DIMMs, Max. 25 GbE Ports, 300W RPSU, CPU cooler, optional IPMI, 1x PCI-E x4 slot, Barebone without RAM/HDD/Drive Bay Kit/IBN Card*

*** For a complete system, IBN modules & some components must be ordered.**

Accessories

PK1-51	Console cable, 160cm
IDN100	IPMI 2.0 module
VGA21A	VGA cable, 40cm

Dimensions

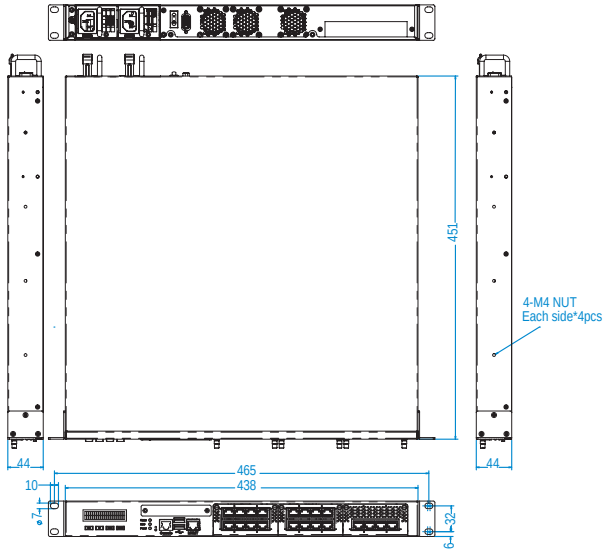

Optional Component BOM

Configuration Options		Component BOM
Front I/O Options	Storage & Expansion Options	Model Kits
FWA8600 & FWA8600-RPSU NIC: 3x IBN cards	None	FWA8600 KIT1
	Expansion slot	FWA8600 KIT2
	1x 2.5" drive + Expansion slot	FWA8600 KIT3
	2x 2.5" drvie bays	FWA8600 KIT4
FWA8600 & FWA8600-RPSU SHD: 2x IBN cards + swappable 2x 2.5" drive bays	None	FWA8600 KIT5
	Expansion slot	FWA8600 KIT6
	1x 2.5" drive + Expansion slot	FWA8600 KIT7
	2x 2.5" drive bays	FWA8600 KIT8
FWA8600 & FWA8600-RPSU SHQ: 1x IBN cards + swappable 4x 2.5" drive bays	None	FWA8600 KIT9
	Expansion slot	FWA8600 KIT10

Front I/O

FWA8600-NIC

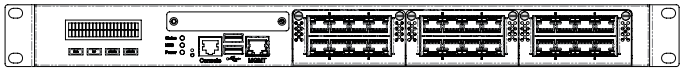

FWA8600-SHD

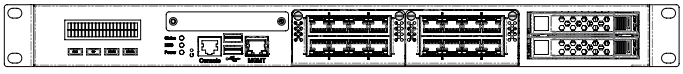

FWA8600-SHQ

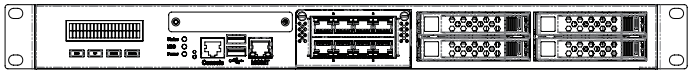

Remarks: 1. Specifications are subject to change without prior notice. 2. ODM/OEM is available. 3. For user's manual & datasheet download, visit www.ibase.com.tw.

INA3608

Rackmount Network Appliance

Mainstream 1U Network Security Server with 13th Gen Intel® Core™ Processors (formerly Raptor Lake-S) & up to 10 GbE Ports

Features

- 13th Gen Intel® Core™ Processors with PCH R680E
- 2x DDR5 UDIMM 4800MHz (ECC)
- 4x 2.5GbE RJ45 with 1 pair bypass on board
- 2x Gbe SFP ports on board
- Optional NIC slot
- 1x SATA/NVMe M.2
- 1x PCI-E (x8) expansion slot
- 600W 1+1 redundant power supply

Specifications

CPU	LGA1700 Socket for 13th Gen Intel® Core i Processors
Chipset	Intel® PCH R680E
Memory	2x DDR5 UDIMM 4800 MHz, up to 128 GB
Display	N/A
Ethernet	4x 2.5Gbe RJ45 ports (Intel® i226V) 4x 1Gbe SFP ports (Intel® i210IS) 2x 10Gbe SFP+ (Intel® X710)
Bypass	1x Segment (MCU control)
Expansion	1x PCI-E Gen5 x8 (for SSL card) 1x PCI-E Gen5 x8 (for IBN module)
IPMI	N/A
Storage	1x 2.5" HDD/SSD 1x SATA DOM 1x 2280 M.2 slot
TPM	TPM 2.0
I/O	1x LCM 3x LED (Status/HDD/Power) 1x RJ45 console 2x USB 3.0 1x Reset button 1x NMI button
Power Supply	600W 1+1 Redundant Power Supply 500W Single Power Supply
Dimensions	438(W) x 420(D) x 44(H) mm ± 0.3mm
Weight	N/A
Operating Temperature	0°C~ 50°C
Storage Temperature	-20° ~ 70°C
Operating Humidity	10% ~ 90%
Certification	CE/FCC

Ordering Information

INA3608	1U Rackmount Appliance, MBN3608, 13th Gen Intel® Alder Lake Core i, R680E PCH, 2x DDR5 UDIMM, 600W RPSU Barebone without CPU/RAM/HDD/IBN Card/SSL Card

Accessories

PK1-51	Console cable, 160cm

Dimensions

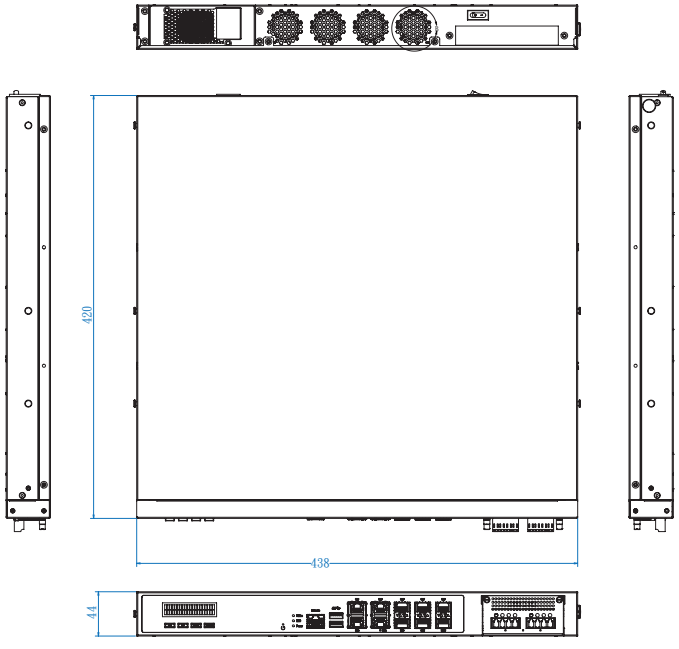

INA3606

Rackmount Network Appliance

Mainstream 1U Network Security Server with 12th Gen Intel® Core™ Processors (formerly Alder Lake-S) & up to 10 GbE Ports

Features

- 12th Gen Intel® Core™ Processors with PCH R680E
- 2x DDR5 UDIMM 4800MHz (ECC)
- 4x 2.5GbE RJ45 with 1 pair bypass on board
- 2x Gbe SFP ports on board
- Optional NIC slot
- 1x SATA/NVMe M.2
- 1x PCI-E (x8) expansion slot
- 600W 1+1 redundant power supply

Specifications

CPU	LGA1700 Socket for 12th Gen Intel® Core i Processors
Chipset	Intel® PCH R680E
Memory	2x DDR5 UDIMM 4800 MHz, up to 128 GB
Display	1x LCM
Ethernet	4x 2.5Gbe RJ45 ports (Intel® i226V) 4x 1Gbe SFP ports (Intel® i210IS) 2x 10Gbe SFP+ (Intel® X710)
Bypass	1x segment (MCU control)
Expansion	1x PCI-E Gen5 x8 (for SSL card) 1x PCI-E Gen5 x8 (for IBN module)
IPMI	N/A
Storage	1x 2.5" HDD/SSD 1x SATA DOM 1x 2280 M.2 slot
TPM	TPM 2.0
I/O	1x LCM 3x LED (Status/HDD/Power) 1x RJ45 console 2x USB 3.0 1x Reset button 1x NMI button
Power Supply	600W 1+1 Redundant Power Supply 500W Single Power Supply
Dimensions	438(W) x 420(D) x 44(H) mm ± 0.3mm
Weight	N/A
Operating Temperature	0°C~ 50°C
Storage Temperature	-20° ~ 70°C
Operating Humidity	10% ~ 90%
Certification	CE/FCC

Ordering Information

INA3606	1U Rackmount Appliance, MBN3608, 12th Gen Intel® Core i, R680E PCH, 2x DDR5 UDIMM, 600W RPSU Bare-bone without CPU/RAM/HDD/IBN Card/SSL Card

Accessories

PK1-51	Console cable, 160cm

Dimensions

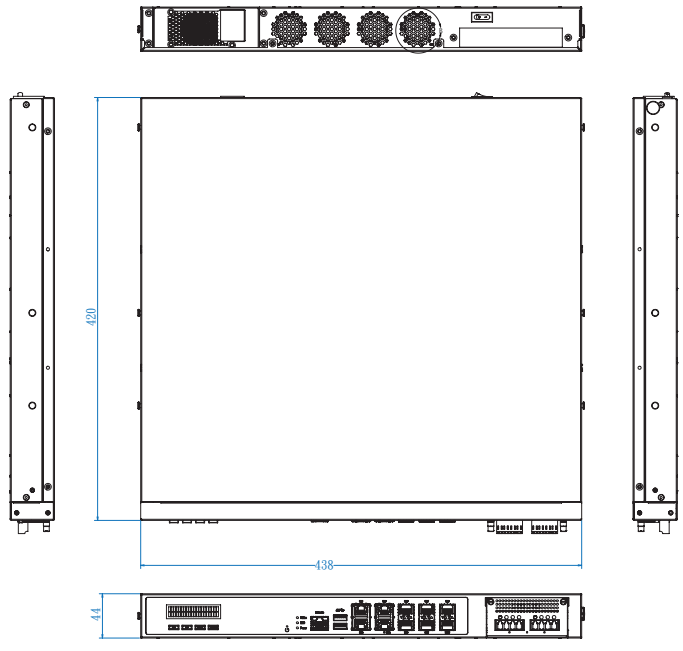

Remarks: 1. Specifications are subject to change without prior notice. 2. ODM/OEM is available. 3. For user's manual & datasheet download, visit www.ibase.com.tw.

INA3600

Rackmount Network Appliance

Mainstream 1U Network Appliance with 10th Gen Intel® Xeon® W / Core™ i9/i7/i5/i3 Pentium® Gold / Celeron® Processor & up to 14 GbE Ports

Features

- 10th Gen Intel® Xeon® W / Core™ i9/i7/i5/i3 / Pentium® Gold / Celeron® Processor with W480E or H420E PCH (CML-S)
- 2x DDR4 UDIMMs, Max. 64GB (ECC/ Non-ECC)
- 6x RJ45 GbE on board
- Optional NIC slot (Only for INA3600W)
- 1x PCI-E (x8) expansion slot
- 300W power supply

Specifications

CPU	INA3600W: LGA1200 Socket for Intel® Xeon® W / Core™ i9/i7/i5/i3 / Pentium® Gold / Celeron® processor INA3600H: LGA1200 Socket for Intel® Core™ i9/i7/i5/i3 / Pentium® Gold / Celeron® processor
Chipset	INA3600W: Intel® W480E PCH chipset INA3600H: Intel® H420E PCH chipset
Memory	2x DDR4 UDIMMs Max. 64GB
Display	1x VGA 1x LCM
Ethernet	INA3600W: 6x Intel® I211-AT GbE on board Optional NIC module slot, Max. 8 LAN ports INA3600H: 6x Intel® I211-AT GbE on board
Bypass	2-Segments, LAN3/4 & 5/6
Expansion	1x PCI-E x16 slot (8-lane) for INA3600W
IPMI	N/A
Storage	3x 2.5" SATA drive bay (by SKU)
TPM	TPM 2.0
I/O	1x LCM (by SKU) 3x LED (Power/ HDD/ Status) 1x Reset button 1x RJ45 console 2x USB3.1
Power Supply	Full-range 300W power supply
Dimensions	438 (W) x 329 (D) x 44 (H) mm 17.24" (W) x12.95" (D) x 1.73" (H)
Weight	9.0 kg (19.84 lbs)
Operating Temperature	0°C ~ 40°C (32°F ~ 104°F)
Storage Temperature	-20° ~ 70°C (-4°F ~ 158°F)
Operating Humidity	5 ~ 90%
Certification	CE/FCC

Ordering Information

INA3600W	INA3600W 1U Rackmount Appliance, MBN807W Intel® CML-S, W480E PCH, 2x DDR4 DIMMs, Max. 14 LAN Ports, 300W PSU, CPU cooler, 1x PCI-E x16 slot, 1x iIO2 LCM. Barebone without CPU/RAM/HDD/IBN Card
INA3600H	INA3600H 1U Rackmount Appliance, MBN807H Intel® CML-S, H420E PCH, 2x DDR4 DIMMs, Max. 10 LAN Ports, 300W PSU, CPU cooler, 1x PCI-E x16 slot, 1x iIO2 LCM. Barebone without CPU/RAM/HDD/IBN Card

Dimensions

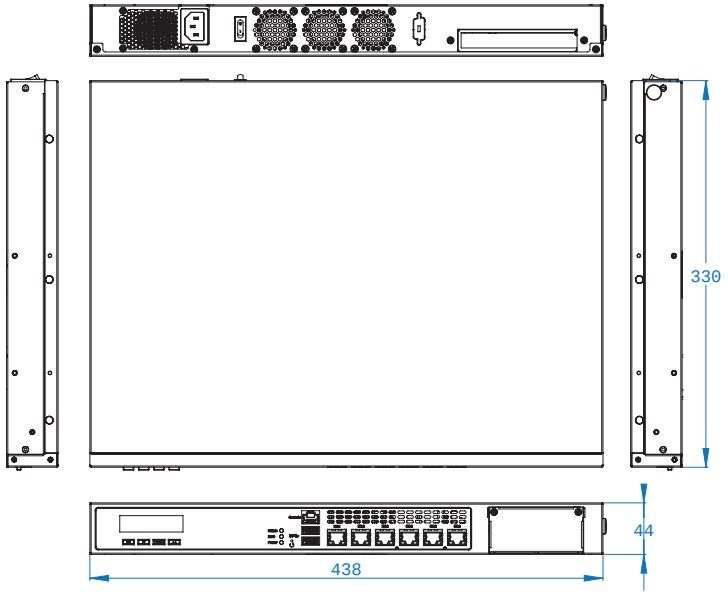

FWA8506

Rackmount Network Appliance

Mainstream 1U Network Appliance with
Intel® Atom® Processor C3000 Series 6 GbE & 4 10GbE Ports

Features

- Intel® Atom® Processor C3758
- 2x DDR4 DIMMs; Max. 32GB (UDIMM ECC / non-ECC) or 64GB (RDIMM)
- 6x PCI-E GbE RJ45 ports; 2x Advanced LAN Bypass pairs
- 4x 10GbE SFP+ ports
- 1x PCI-E slot, 1x CF slot

Specifications

CPU	Intel® Atom® Processor C3758 (8 Cores, 2.2GHz)
Chipset	N/A
Memory	2x DDR4 DIMMs up to 2400MHz,Max. 64GB RDIMM, Max. 32GB UDIMM (ECC or non-ECC)
Display	1x LCM
Ethernet	6x Intel® I211-AT GbE 1x Inphi CS4223 for 4x 10GbE
Bypass	2x segment, LAN 3/4 & 5/6
Expansion	1x PCI-E x8 slot (4-lane)
IPMI	N/A
Storage	2x 2.5" SATA drive bay 1x CF slot
TPM	TPM 1.2
I/O	3x LED (Power / HDD / Status) 1x Factory default button (GPIO) 1x RJ45 console 2x USB 3.0
Power Supply	Full-range 250W ATX power supply
Dimensions	438 mm (W) x 340 mm (D) x 44 mm (H) 17.24"(W) x 13.38"(D) x 1.73"(H)
Weight	6.50 kg
Operating Temperature	0°C ~ 40°C (32°F ~ 104°F)
Storage Temperature	-20°C ~ 70°C (-4°F ~ 158°F)
Operating Humidity	5 ~ 90%
Certification	CE/FCC

Ordering Information

FWA8506	1U Rackmount Appliance, MBN802 Intel® Atom® Processor C3758, 2x DDR4 DIMMs, 6 GbE RJ45, 4 10GbE SFP+, 250W PSU, CPU cooler, Barebone without RAM/HDD/Drive Bay Kit*

*Must Order Component BOM

Accessories

PK1-51	Console cable, 160cm

Dimensions

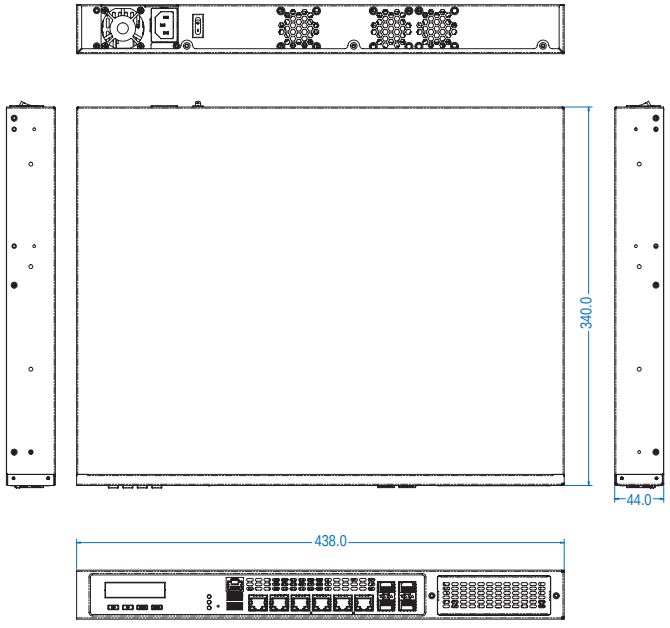

Remarks: 1. Specifications are subject to change without prior notice. 2. ODM/OEM is available. 3. For user's manual & datasheet download, visit www.ibase.com.tw.

Optional Component BOM

Configuration Options		Component BOM
Option Area-A	Option Area-B	Model Kit
None	None	FWA8506 KIT1
None	1x Expansion Slot	FWA8506 KIT2
None	Swappble 2x 2.5" drive bays	FWA8506 KIT3
2x 2.5" HDD	None	FWA8506 KIT4
2x 2.5" HDD	1x Expansion Slot	FWA8506 KIT5

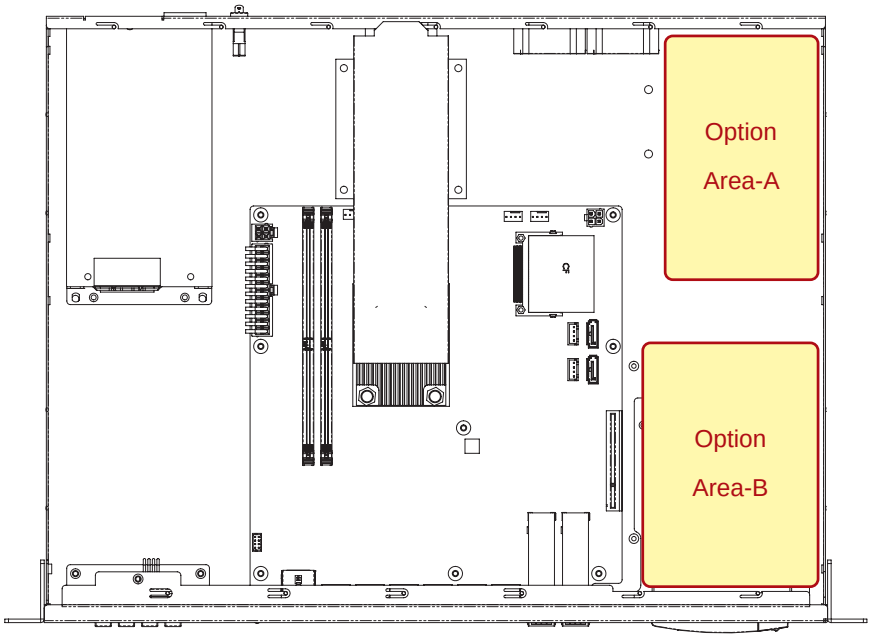

INA2205

Rackmount Network Appliance

Entry 1U Network Appliance with Intel® Core® Processor (formerly Alder Lake-N) & up to 8 GbE ports

Features

- Intel® Core® Processor (formerly Alder Lake-N)
- 1x DDR5 SO-DIMM, Max. 16GB (Non-ECC)
- 6x 2.5G LAN RJ45 ports with 1 pair bypass on board
- 2x SFP ports
- Supports open frame 65W power supply

Specifications

CPU	Intel® Core® Processor (Formerly Alder Lake-N) FCBGA1264
Chipset	N/A
Memory	1x DDR5 SO-DIMM (Non-ECC) Max. 16GB
Display	1x LCM
Ethernet	6x Intel® i226V 2.5GbE RJ45 2x Intel® i210IS SFP
Bypass	1x Segment, LAN5/LAN6
Expansion	N/A
IPMI	N/A
Storage	1x 2.5" HDD/SSD 1x M.2 SATA
TPM	TPM 2.0
I/O	1x LCM 3x LED (Status/ HDD/ Power) 1x RJ45 console 6x 2.5G LAN RJ45 2x SFP 2x USB 3.0 1x Reset Button
Power Supply	Open frame 65W power supply
Dimensions	438 (W) x 180 (D) x 43.5 (H) mm
Weight	6 kg
Operating Temperature	0°C ~ 40°C
Storage Temperature	-20° ~ 70°C
Operating Humidity	10 ~ 90%
Certification	CE/FCC

Ordering Information

INA2205	1U Rackmount Appliance, MBN2205 Intel® Core® Processor SoC, 1x DDR5 SO-DIMM Max. 16GB, 6x 2.5GbE RJ45, 2x GbE SFP, Open frame 65W PSU, CPU cooler, Barebone without RAM/HDD

Dimensions

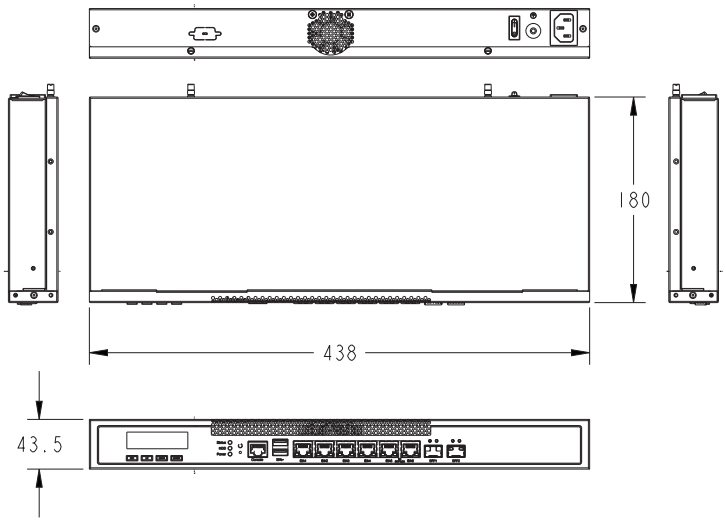

Remarks: 1. Specifications are subject to change without prior notice. 2. ODM/OEM is available. 3. For user's manual & datasheet download, visit www.ibase.com.tw.

FWA6706R

Rackmount Network Appliance

Entry 1U Network Appliance with
Intel® Celeron® Processor N3350 & 6 GbE Ports

Features

- Intel® Celeron® Processor N3350, Dual-Core 1.1GHz
- 2x DDR3L SO-DIMMs; Max. 16GB (non-ECC)
- 6x PCI-E GbE ports; 1x advanced LAN Bypass pair
- 1x Mini PCI-E slot
- 1x CF slot

Specifications

CPU	Intel® Celeron® Processor N3350, Dual-Core 1.1GHz
Chipset	N/A
Memory	2x DDR3L SO-DIMMs up to 1866MHz, Max. 16GB (Non-ECC)
Display	1x VGA via pin-header 1x LCM
Etherent	6x Intel® I211-AT GbE
Bypass	1x segment, LAN 5/6
Expansion	1x Mini PCI-E slot (PCI-E & USB signal)
IPMI	N/A
Storage	1x 2.5" SATA drive bay 1x CF slot
TPM	TPM 1.2
I/O	1x LCM 3x LED (Power / HDD / Status) 1x Factory default button (GPIO) 1x RJ45 console 2x USB 3.0
Power Supply	Full-range 65W open frame
Dimensions	438 mm (W) x 180 mm (D) x 44 mm (H) 17.24" (W) x 7.09" (D) x 1.73" (H)
Weight	3 kg (6.62 lbs)
Operating Temperature	0°C ~ 40°C (32°F ~ 104°F)
Storage Temperature	-20° ~ 70°C (-4°F ~ 158°F)
Operating Humidity	5% ~ 90%
Certification	CE/FCC

Ordering Information

FWA6706R	1U Rackmount Appliance, MBN501 Intel® N3350 Dual-Core 1.1GHz, 2x DDR3L SO-DIMMs, Max. 6 GbE Ports, 65W Open Frame, CPU cooler, Barecone without RAM/HDD

Accessories

PK1-51	Console cable, 160cm
VGA21A	VGA cable, 40cm

Dimensions

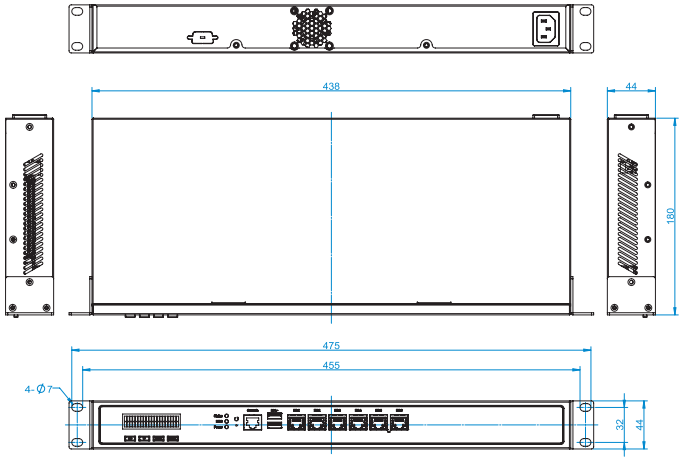

FWA6706D

Desktop Network Appliance

Compact & Slim Fanless Network Appliance with Intel® Celeron® Processor N3350 & 6 GbE Ports

Features

- Intel® Celeron® Processor N3350, Dual-Core 1.1GHz
- 2x DDR3L SO-DIMMs; Max. 16 GB (non-ECC)
- 6x PCI-E GbE ports; 1x advanced LAN Bypass pair
- 1x Mini PCI-E slot
- 1x CF slot

Specifications

CPU	Intel® Celeron® Processor N3350, Dual-Core 1.1GHz
Chipset	N/A
Memory	2x DDR3L SO-DIMMs up to 1866MHz, Max. 16GB (Non-ECC)
Display	1x VGA via pin-header (by project)
Ethernet	6x Intel® I211-AT GbE
Bypass	1x segment, LAN5/6
Expansion	1x Mini PCI-E (PCI-E & USB signal)
IPMI	N/A
Storage	1x 2.5" SATA drive bay 1x CF slot
TPM	TPM 1.2
I/O	3x LED (Power / HDD / Status) 1x Factory default button (GPIO) 1x RJ45 console 2x USB 3.0
Power Supply	Full-range 40W power adaptor / 12V
Dimensions	227 mm (W) x 142 mm (D) x 44 mm (H) 8.94"(W) x 5.59"(D) x 1.73"(H)
Weight	2 kg (4.41 lbs)
Operating Temperature	SSD: 0°C ~ 40°C (32°F ~ 104°F) HDD: 0°C ~ 35°C (32°F ~ 95°F)
Storage Temperature	-20° ~ 70°C (-4°F ~ 158°F)
Operating Humidity	5% ~ 90%
Certification	CE/FCC

Ordering Information

FWA6706D	Desktop Appliance, Intel® Celeron® Processor N3350, 2x DDR3L SO-DIMMs, 6 GbE Ports, 40W Adaptor, 2.5" HDD Bracket, Barebone without RAM/HDD

Accessories

PK1-51	Console cable, 160cm

Dimensions

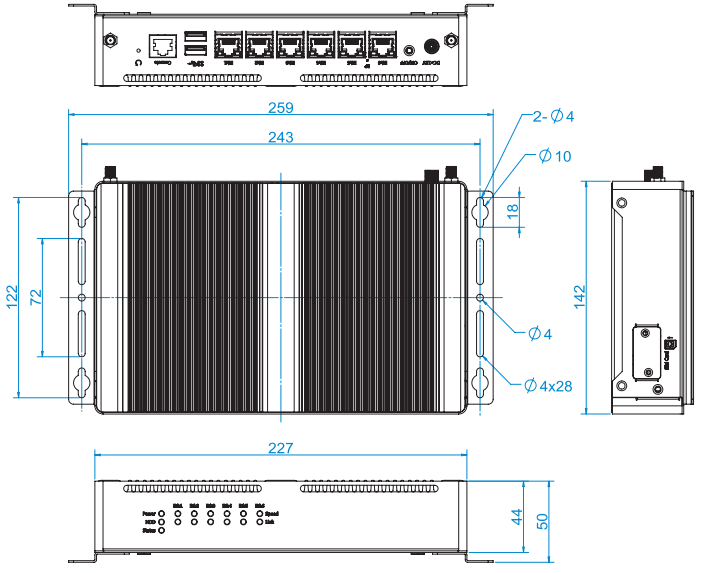

Remarks: 1. Specifications are subject to change without prior notice. 2. ODM/OEM is available. 3. For user's manual & datasheet download, visit www.ibase.com.tw.

AGS103T

Desktop Network Appliance

Compact DIN-Rail Network Appliance with Intel® Atom® x6414RE/x6212RE Processors

Rear I/O

Azure Certified Device

aws

Features

- Intel® Atom® x6414RE/x6212RE Processors (formerly Elkhart Lake)
- GPIO 4-in/4-out & 1x DVI-I & 1x HDMI
- Over/Under/Reverse voltage protection
- Extended operating temperature from -20°C to 70°C
- 9V~36V DC wide-range power input
- 1x M.2 B-Key 3052 support 5G module
- Optional 1x 2.5" SSD (AGS103TS)
- 3x 2.5G Ethernet ports
- 2x full-size Mini PCI-E
- 4x COM (RS232/422/485), 2x USB 3.1 & 2x USB 2.0
- Supports DIN-rail mount, wall mount & TPM 2.0

Specifications

System Mainboard	IB803T
CPU Type	Intel® Atom® x6414RE (1.5GHz, 1.5MB cache, 9W TDP) Intel® Atom® x6212RE (1.2GHz, 1.5MB cache, 6W TDP)
System Speed	Up to 1.5GHz
Memory	1x DDR4 SO-DIMM , Max. 16GB
Rear Panel External I/O	1x DVI-I + 1x HDMI 2x USB 3.1 ports, 2x USB 2.0 port 3x RJ45 2.5G Ethernet port 4x LED indicators (GPIO, WLAN, WWAN) 1x power button with Green LED 1x 3-pin DC-in terminal block for 9V-36V 2x Antenna hole for WLAN module 2x RS232/422/485 ports for COM#3/COM#4 1x 4-in & 4-out GPIO
Left Panel External I/O	2x RS232/422/485 ports for COM#1/COM#2 1x Antenna hole for WLAN module 1x Line-out/ Mic-in
Right Panel External I/O	2x SIM card slot 1x Antenna hole for WLAN module
Expansion Slots	1x Full-size Mini PCI-E socket (USB 2.0) 1x Full-size Mini PCI-E socket (USB 2.0 + SATA) 1x M.2 B-Key socket (USB 3.0 + PCI-E)
Storage	1x Mini PCI-E slot (mSATA SSD),1x 2.5" SSD (AGS103TS)
Construction	Aluminum & steel
Chassis Color	Silver & Gray
Mounting	DIN-rail mounting (DIN-rail mount kit included) Desktop or wall mounting (wall mount kit included)
Dimensions	AGS103T : 190mm(W) x 110mm(D) x 52mm (H) 7.48"(W) x 4.33"(D) x 2.05"(H) AGS103TS : 190mm(W) x 110mm(D) x 73mm (H) 7.48"(W) x 4.33"(D) x 2.87"(H)
Weight	1.2kg
Operating Temperature	-20°C~70°C (-4°F~158°F)
Storage Temperature	-40°C ~ 85°C (-40°F~185°F)
Relative Humidity	5~90% @ 60°C, (non-condensing)
Vibration	Operating: 2.0 Grms / 5~500Hz / random operation (with IEC 60068-2-64)
Shock	Operating: 30G/11 ms Duration Non-operating: 40G/11 ms Duration
Certification	CE/ FCC/ LVD
Operating Systems	Win10 and Linux Ubuntu

Ordering Information

AGS103T-6414RM	Fanless DIN-rail System supports TPM2.0 w/ Intel® Atom® Processor x6414RE, 3x 2.5G Ethernet port, 4x COM, w/o memory, storage, power adaptor
AGS103TS-6414RM	Fanless DIN-rail System supports TPM2.0 w/ Intel® Atom® Processor x6414RE, 3x 2.5G Ethernet port, 4x COM, w/o memory, storage, power adaptor, w/ 2.5" storage slot
AGS103T-6212RM	Fanless DIN-rail System supports TPM2.0 w/ Intel® Atom® Processor x6212RE, 3x 2.5G Ethernet port, 4x COM, w/o memory, storage, power adaptor
AGS103TS-6212RM	Fanless DIN-rail System supports TPM2.0 w/ Intel® Atom® Processor x6212RE, 3x 2.5G Ethernet port, 4x COM, w/o memory, storage, power adaptor, w/ 2.5" storage slot

Remarks: 1. Specifications are subject to change without prior notice. 2. ODM/OEM is available. 3. For user's manual & datasheet download, visit www.ibase.com.tw.

INA1607

uCPE/SD-WAN Appliances

Desktop uCPE/SD-WAN Network Appliance with Intel® Atom® x7405C (formerly Alder Lake-N) & up to 2x GbE Ports

Features

- Intel® Atom® x7405C (formerly Alder Lake-N)
- 1x DDR5 SODIMM; Max. 16GB (ECC/non-ECC)
- 4x 2.5GbE RJ45
- 2x GbE RJ45 and 2x GbE SFP
- 1x Mini PCI-E slot
- 2x M.2 slot
- Supports WiFi/WiFi 6, LTE/5G, with up to 4 antennas

Specifications

CPU	Intel® Atom® x7405C (formerly Alder Lake-N)
Chipset	N/A
Memory	1x DDR5 SODIMM Up to 4800MHz Max. 16GB (ECC/non-ECC)
Display	N/A
Ethernet	4x Intel® I226-V 2.5 GbE 1x Intel® i350-AM4 (2x GbE RJ45 and 2x GbE SFP)
Bypass	1x segment, LAN 1/2
Expansion	1x Mini PCI-E slot 1x M.2 slot (B-key 3042 and 3052, PCI-E(x1) & USB 3.0 signal) for LTE/5G 2x Micro SIM for M.2 LTE/5G module 1x M.2 slot (B-key 3042 and 3080) for SATA, PCI-E for Storage
IPMI	N/A
Storage	1x 2.5" SATA drive bay 1x 16GB/32GB/64GB eMMc
TPM	TPM 2.0
I/O	3x LED (Status/HDD/Power) 1x Factory default button (GPIO) 1x RJ45 console 2x USB 3.0
Power Supply	Full-range 84W power adaptor / 12V
Dimensions	TBD
Weight	TBD

Operating Temperature	0°C ~ 40°C (32°F ~ 104°F)
Storage Temperature	-20°C ~ 70°C (-4°F ~ 158°F)
Operating Humidity	5% ~ 90%
Certification	CE/FCC

Remarks: 1. Specifications are subject to change without prior notice. 2. ODM/OEM is available. 3. For user's manual & datasheet download, visit www.ibase.com.tw.

INA1600

uCPE/SD-WAN Appliances

Desktop uCPE/SD-WAN Appliance with AMD Ryzen™ Embedded V1605B/R1505G & up to 6x GbE Ports

Features

- AMD Ryzen™ Embedded V1605B/R1505G
- 2x DDR4 SO-DIMMs; Max. 32GB (ECC/non-ECC)
- 4x GbE RJ45
- 2x GbE RJ45 or SFP combo ports (for INA1600V only)
- 1x Mini PCI-E slot
- 2x M.2 slot
- Supports WiFi/WiFi 6, LTE/5G, with up to 8 antennas

Specifications

CPU	INA1600V: AMD Ryzen™ Embedded V1605B INA1600R: AMD Ryzen™ Embedded R1505G
Chipset	N/A
Memory	2x DDR4 SO-DIMMs Up to 3200MHz, Max. 32GB (ECC/non-ECC)
Display	1x DisplayPort
Etherent	INA1600V: 4x Intel® I210-AT GbE 1x Intel® i350-AM2 (2x GbE RJ45 or SFP combo ports) INA1600R: 4x Intel® I210-AT GbE
Bypass	1x segment, LAN 1/2
Expansion	1x Mini PCI-E slot 1x M.2 slot (B-key 3042, PCI-E(x1) & USB 3.0 signal) 2x Micro SIM for M.2 or Mini PCI-E 4G/LTE module 1x M.2 slot (B/M-key 3080, PCI-E(x2) & USB 3.0 & SATA)
IPMI	N/A
Storage	1x 2.5" SATA drive bay
TPM	TPM 2.0
I/O	3x LED (Status/HDD/Power) 1x Factory default button (GPIO) 1x RJ45 console 2x USB 3.0 1x DisplayPort
Power Supply	Full-range 84W adaptor / 12V
Dimensions	250(W) x 231(D) x 44(H) mm 9.84" (W) x 9.09" (D) x 1.73" (H)
Weight	5.3 kg (11.68 lbs)
Operating Temperature	0°C ~ 40°C (32°F ~ 104°F)
Storage Temperature	-20°C ~ 70°C (-4°F ~ 158°F)
Operating Humidity	5% ~ 90%
Certification	CE/FCC

Ordering Information

INA1600V	Desktop Appliance, AMD Ryzen™ Embedded V1605B, 2x DDR4 SO-DIMMs, 4x GbE RJ45 w/ 1 Pair of Bypass, 2x GbE RJ45 or SFP combo ports, 84W Adaptor, DisplayPort, Barebone without RAM/HDD/Drive Bay Kit
INA1600R	Desktop Appliance, AMD Ryzen™ Embedded R1505G, 2x DDR4 SO-DIMMs, 4x GbE RJ45 w/ 1 pair of Bypass, 84W Adaptor, DisplayPort, Barebone without RAM/HDD/ Drive Bay Kit

Accessories

PK1-51	Console cable, 160cm
2.5" HDD Kit	2.5" HDD bracket

Dimensions

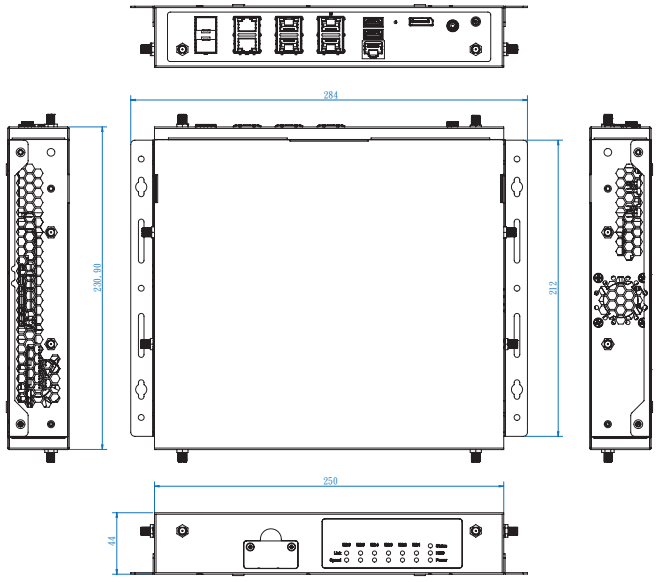

Remarks: 1. Specifications are subject to change without prior notice. 2. ODM/OEM is available. 3. For user's manual & datasheet download, visit www.ibase.com.tw.

Network Interface Modules

Expansion Module Cards
Fast, Multi-Function & Flexible Networking Modules

Model Name		Port	Interface	Bypass Segment	Controller	Compatible Model
IBN-R420BN		4	GbE RJ45	0	1x Intel® i350-AM4	INA7600 FWA9500 FWA8800 FWA8708 FWA8600 FWA8408
IBN-R420B		4	GbE RJ45	2	1x Intel® i350-AM4	INA7600 FWA9500 FWA8800 FWA8708 FWA8600 FWA8408
IBN-R840N		8	GbE RJ45	0	2x Intel® i350-AM4	INA7600 FWA9500 FWA8800 FWA8708 FWA8600 FWA8408
IBN-R840		8	GbE RJ45	4	2x Intel® i350-AM4	INA7600 FWA9500 FWA8800 FWA8708 FWA8600 FWA8408
IBN-S400		4	GbE SFP	0	1x Intel® i350-AM4	INA7600 FWA9500 FWA8800 FWA8708 FWA8600 FWA8408
IBN-S800		8	GbE SFP	0	2x Intel® i350-AM4	INA7600 FWA9500 FWA8800 FWA8708 FWA8600 FWA8408
IBN-S420QSX		4	GbE SFP	2	Intel® i350-AM4	INA7600 FWA9500 FWA8800 FWA8708 FWA8600 FWA8408
IBN-S420DSX		2	GbE SFP	1	Intel® i350-AM2	INA7600 FWA9500 FWA8800 FWA8708 FWA8600 FWA8408

Remarks: 1. Specifications are subject to change without prior notice. 2. ODM/OEM is available. 3. For user's manual & datasheet download, visit www.ibase.com.tw.

Network Interface Modules

Expansion Module Cards
Fast, Multi-Function, Flexible Networking Modules

Model Name		Port	Interface	Bypass Segment	Controller	Compatible Model
IBN-P400Q		4	10GbE SFP+	0	Intel® XL710-BM1	INA7600 FWA9500 FWA8800 FWA8708 FWA8600 FWA8408
IBN-P400D		2	10GbE SFP+	0	Intel® X710-BM2	INA7600 FWA9500 FWA8800 FWA8708 FWA8600 FWA8408
IBN-P401Q		4	10GbE SFP+	0	INPHI PHY WPCS4223C	FWA9500 FWA8600
IBN-P420QSR		4	10GbE SFP+	2	Intel® XL710-BM1	INA7600 FWA9500 FWA8800 FWA8708 FWA8600 FWA8408
IBN-P420DSR		2	10GbE SFP+	1	Intel® X710-BM2	INA7600 FWA9500 FWA8800 FWA8708 FWA8600 FWA8408
IBN-F200		2	25GbE SFP28	0	Intel® XXV710-AM2	INA7600 FWA9500 FWA8800 FWA8600 FWA8408
IBN-C200		2	100G QSFP28	1	TBD	INA7600 FWA8600

Remarks: 1. Specifications are subject to change without prior notice. 2. ODM/OEM is available. 3. For user's manual & datasheet download, visit www.ibase.com.tw.

IBN Module List

Model Name	# of Ports	Interface	Bypass Segment	Controller	Compatible Model
IBN-F2A	2	Gbe SFP	0	i350-AM2	INA3604/INA3605 INA3606/INA3608 INA7602/INA7605
IBN-F2AB	2	Gbe SFP	1	i350-AM2	
IBN-F4A	4	Gbe SFP	0	i350-AM4	
IBN-F4AB	4	Gbe SFP	2	i350-AM4	
IBN-G4CN	4	10Gbe SFP	0	XL710-BM4	
IBN-A2E	2	Gbe RJ45	0	i226	
IBN-A4E	4	Gbe RJ45	0	i226	

Remarks: 1. Specifications are subject to change without prior notice. 2. ODM/OEM is available. 3. For user's manual & datasheet download, visit www.ibase.com.tw.

MEMO

iBASE Industry Leader In Embedded Computing

HEADQUARTERS

IBASE Technology Inc.
11F, No. 3-1, Yuan Qu St., Nankang,
Taipei 115, Taiwan, R.O.C.

廣積科技股份有限公司
台北市115南港區園區街3-1號11樓G棟
Tel: +886-2-2655-7588
Fax: +886-2-2655-7388
sales@ibase.com.tw
www.ibase.com.tw

DOWNLOAD
NETWORK APPLIANCES

WORLDWIDE OFFICES

European Headquarters
IBASE Europe (TMC Technology)
12 Wedgwood Court Stevenage,
Herts, SG1 4QR, United Kingdom
Tel: +44-1438-846090
Fax: +44-1438-842308
sales@ibase-europe.com
www.ibase-europe.com

Italy
IBASE Italy S.r.l.
Via Sant Antonio 1/A
28845 Domodossola, Verbania, Italy
Tel: +39-0324-47501
Fax: +39-0324-47501
italy@ibase-europe.com
www.ibase-europe.com

USA
IBASE Technology (USA), Inc.
1050 Stewart Drive,Sunnyvale,
CA 94085, U.S.A.
Tel: +1-408-992-0888
Fax: +1-408-992-0808
sales@ibase-usa.com
www.ibase-usa.com

Singapore
IBASE Singapore Pte Ltd.
10, Ubi Crescent #07-60,
Ubi Techpark (Lobby D),
Singapore 408564
Tel: +65-6842-5112
Fax: +65-6842-5113
sales@ibase-singapore.com
www.ibase-singapore.com

China
IBASE (Shanghai) Technology Inc.
2F, Building 3, No. 2005, HongMei
Road, 201103 Shanghai, China
上海广佳信息技术有限公司
中国上海市虹梅路2005号3号楼2层
邮编：201103
Tel: +86-021-6090-5088
Fax: +86-021-6090-6388
sales@ibase-china.com
www.ibase-china.com

China
IBASE (Shanghai) Technology Inc.
Beijing Office
Room 1622, GuoFengMeiTang
Building 5, No. 106, KeXing West Road,
Changping District, 100029 Beijing, China
上海广佳信息技术有限公司-北京办事处
中国北京市昌平区回龙观科星西路106号
国风美唐5号商务楼1622室
邮编：100029
Tel: +86-133-113-80499
sales@ibase-china.com
www.ibase-china.com

Japan
IBASE Japan Corp.
3F Bansei Muromachi Bldg., 4-3-12
Nihonbashi Muromachi, Chu-O ku,
Tokyo, Japan
IBASE ジャパン株式会社
東京都中央区日本橋室町4-3-12
バンセイ室町ビル3F
Tel: +81-3-6262-1303
Fax: +81-3-6262-6106
sales@ibase-japan.com
www.ibase-japan.com

India
IBASE India
sales@ibase-india.com
www.ibase-india.com

intel partner Titanium