IBR500

MediaTek Genio 700/MT8390 or Genio 510/MT8370 Processor



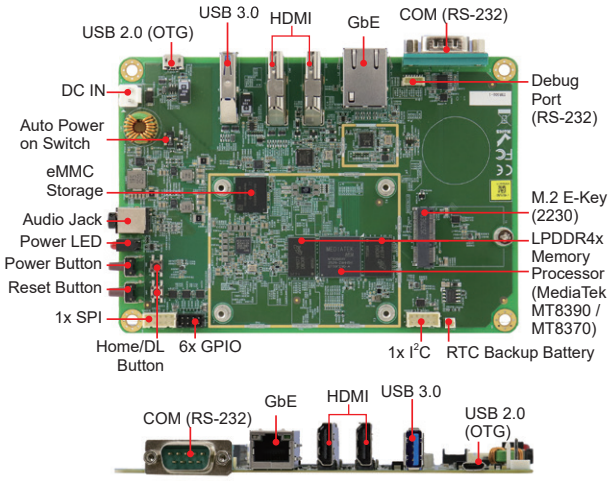

Features

- MediaTek Genio 700 / MT8390 2.2GHz or Genio 510 / MT8370 2.0GHz processor
- On-board LPDDR4X, 4GB or 8GB, 3733MT/s
- On-board eMMC 5.1, 64GB or 128GB for O.S.
- Integrated NPU up to 3.2 TOPS/4 TOPS (Genio 510/Genio 700)
- Dual HDMI: Max. 4K60 + 4K30 / Single HDMI: Max. 4K60
- Embedded I/O for COM, GPIO, USB, HDMI, Ethernet
- Supports M.2 E-Key (2230) for Wireless
- Supports Android & Ubuntu

Specifications

CPU	MediaTek Genio 700 (MT8390): 2x Arm® Cortex®-A78 2.2GHz + 6x Arm® Cortex®-A55 2.0GHz MediaTek Genio 510 (MT8370): 2x Arm® Cortex®-A78 2.0GHz + 4x Arm® Cortex®-A55 2.0GHz
PCH	N/A
Memory	4GB or 8GB LPDDR4X on board, 3733MT/s, Non-ECC
BIOS	N/A
Watchdog Timer	256 levels, 0~128 Secs
H/W Monitor	N/A
Storage Device Interface	64GB or 128GB eMMC 5.1 on board
Mini Type Slots	1x M.2 E-Key (2230, SDIO & UART) for Wi-Fi/BT
Graphics Controller	Arm® Mali™-G57 MC3 (Genio 700) / MC2 (Genio 510), OpenGL ES 1.1/2.0/3.2, Vulkan 1.0/1.1
Video Output	2x HDMI: dual display 4K60 + 4K30 / single display 4K60
Ethernet	1x Gigabit Ethernet (RJ45)
I/O Chipset	N/A
Serial Port	1x RS232 (DB-9), 1x RS232 for debug (internal)
USB 2.0	1x USB 2.0 Micro-USB (OTG)
USB 3.X	1x USB 3.0 Type-A
Serial ATA	N/A
Audio	1x Audio Line-out (audio jack)
TPM	N/A
Others	NPU: 3.2 TOPS/4 TOPS (Genio 510/Genio 700) Video codec: decode up to 4K75 (Genio 700) / 4K60 (Genio 510) AV1, VP9, H.265, H.264; encode 4K30 H.265, H.264 6x GPIO, 1x I²C, 1x SPI, Power / Reset / Home buttons 12VDC-IN jack and internal connector
Dimensions (L x W)	147mm x 102mm (5.79" x 4.02")
Power Consumption	MediaTek Genio 700 2.2GHz w/ 8GB LPDDR4X (Onboard) +12V: ~0.3A
Operating Temperature	-10°C ~ +50°C (14°F ~ +122°F) with heat sink or through housing design
Storage Temperature	-20°C ~ +80°C (-4°F ~ +176°F)
Relative Humidity	10% ~ 90% (non-condensing)

Ordering Information

IBR500-1	MediaTek Genio 700/MT8390, 8GB LPDDR4X, 64GB eMMC 5.1
IBR500-2	MediaTek Genio 510/MT8370, 4GB LPDDR4X, 64GB eMMC 5.1
IBR500-3	MediaTek Genio 700/MT8390, 8GB LPDDR4X, 128GB eMMC 5.1

Dimensions and Drawings

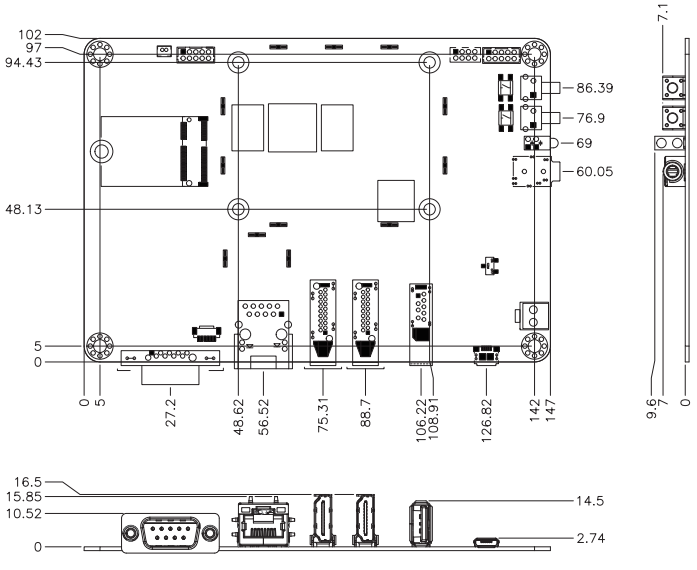

Remarks: 1. Specifications are subject to change without prior notice. 2. ODM/OEM is available. 3. For user's manual & datasheet download, visit www.ibase.com.tw.